TIPS VENDOR AGREEMENT
PART 1 ONLY

Between_____Trex Commercial Products, Inc. dba Staging Concepts_____**and**
(Company Name)

THE INTERLOCAL PURCHASING SYSTEM (TIPS),
a Department of Texas Education Service Center Region 8 for
TIPS RFP 210703 Staging, Enclosure, and Riser Products and Services (2 PART with JOC) - PART 1 ONLY

General Information

The Vendor Agreement ("Agreement") made and entered into by and between The Interlocal Purchasing System (hereinafter "TIPS") a government cooperative purchasing program authorized by the Region 8 Education Service Center, having its principal place of business at 4845 US Hwy 271 North, Pittsburg, Texas 75686 and the TIPS Vendor. This Agreement consists of the provisions set forth below, including provisions of all attachments referenced herein. In the event of a conflict between the provisions set forth below and those contained in any attachment, the provisions set forth shall control unless otherwise agreed by the parties in writing and by signature and date on the attachment.

A Purchase Order ("PO"), Agreement or Contract is the TIPS Member's approval providing the authority to proceed with the negotiated delivery order under the Agreement. Special terms and conditions as agreed between the Vendor and TIPS Member should be added as addendums to the Purchase Order, Agreement or Contract. Items such as certificate of insurance, bonding requirements, small or disadvantaged business goals are some, but not all, of the possible addendums.

Terms and Conditions

Freight
All quotes to Members shall provide a line item for cost for freight or shipping regardless if there is a charge or not. If no charge for freight or shipping, indicate by stating "No Charge", "$0", "included in price" or other similar indication. Otherwise, all shipping, freight or delivery changes shall be passed through to the TIPS Member at cost with no markup and said charges shall be agreed by the TIPS Member unless alternative shipping terms are agreed by TIPS as a result of the proposal award.

Warranty Conditions
All new supplies equipment and services shall include ***manufacturer's minimum standard warranty*** unless otherwise agreed to in writing. Vendor shall be legally permitted to sell all products offered for sale to TIPS Members if the offering is included in the Request for Proposal ("RFP") category. All goods proposed and sold shall be new unless clearly stated in writing.

Customer Support
The Vendor shall provide timely and accurate customer support for orders to TIPS Members as agreed by the Parties. Vendors shall respond to such requests within a commercially reasonable time after receipt of the request. If support and/or training is a line item sold or packaged with a sale, support shall be as agreed

with the TIPS Member.

Agreements

Agreements for purchase will normally be put into effect by means of a contract, agreement, or purchase order(s) executed by authorized agents of the TIPS Member participating government entities, but other means of placing an order may be used at the Member's discretion. Vendor accepts and understands that when a purchase order or similar purchase document is sent from a customer through TIPS to the Vendor, TIPS is recording the purchase and verifying whether the purchase is within the parameters of the TIPS Contract only. Vendor agrees that TIPS is not a legal party to the purchase order or similar purchase document and TIPS is not responsible for identifying fraud, mistakes, or misrepresentations for the specific order. Vendor agrees that any purchase order or similar purchase document issued from a customer to Vendor, even when processed through TIPS, constitutes a legal contract between the customer and Vendor only. A Vendor that accepts a purchase order or similar purchase document and fulfills an order, even when processed through TIPS, is representing that the vendor has carefully reviewed the purchase order or similar purchase document for legality, authenticity, and accuracy.

Tax exempt status

Most TIPS Members are tax exempt and the related laws and/or regulations of the controlling jurisdiction(s) of the TIPS Member shall apply.

Assignments of Agreements

No assignment of this Agreement may be made without the prior notification of TIPS. Written approval of TIPS shall not be unreasonably withheld. Payment for delivered goods and services can only be made to the awarded Vendor, Vendor designated reseller or vendor assigned company.

Disclosures

- Vendor and TIPS affirm that he/she, or any authorized employees or agents, has not given, offered to give, nor intends to give at any time hereafter any economic opportunity, future employment, gift, loan, gratuity, special discount, trip, favor or service to a public servant in connection with this Agreement.

- Vendor shall attach, in writing, a complete description of any and all relationships that might be considered a conflict of interest in doing business with the TIPS program.

- The Vendor affirms that, to the best of his/her knowledge, the offer has been arrived at independently, and is submitted without collusion with anyone to obtain information or gain any favoritism that would in any way limit competition or give an unfair advantage over other vendors in the award of this Agreement.

Term of Agreement and Renewals

The Agreement with TIPS is for approximately three (3) years with an option for renewal for an additional one (1) consecutive year. If TIPS offers the renewal extension year, the Vendor will be notified by email to the primary contact of the awarded Vendor and shall be deemed accepted by the Vendor unless the awarded Vendor notifies TIPS of its objection to the additional term. TIPS may or may not exercise the available extension(s) provided in the original solicitation beyond the base three-year term. Whether or not to offer the extension is at the sole discretion of TIPS.

"Start Date" for Term Calculation Purposes Only: Regardless of actual award/effective date of Contract, for Agreement "term" calculation purposes only, the Agreement "start date" is the last day of the month that Award Notifications are anticipated as published in the Solicitation
Example: *If the anticipated award date published in the Solicitation is May 22, 2020 but extended negotiations delay award until June 27, 2020 The end date of the resulting initial "three-year" term Agreement, (which is subject to an extension(s)) will still be May 31, 2023.*

"Termination Date": The scheduled Agreement "termination date" shall be the last day of the month of the month of the Original Solicitation's Anticipated Award Date plus three years.
Example: *If the original term is approximately three years, and the solicitation provides an anticipated award date of May 22, 2020, the expiration date of the original three-year term shall be May 31, 2023.*

Extensions: Any extensions of the original term shall begin on the next day after the day the original term expires.
Example Following the Previous Example: *If TIPS offers a one-year extension, the expiration of the extended term shall be May 31, 2024*.

TIPS may offer to extend Vendor Agreements to the fullest extent the original Solicitation permits.

Automatic Renewal Clauses Incorporated in Awarded Vendor Agreements with TIPS Members Resulting from the Solicitation and with the Vendor Named in this Agreement.
No Agreement for goods or services with a TIPS Member by the awarded vendor named in this Agreement that results from the solicitation award named in this Agreement, may incorporate an automatic renewal clause that exceeds month to month terms with which the TIPS Member must comply. All renewal terms incorporated in an Agreement by the vendor with the TIPS Member shall only be valid and enforceable when the vendor receives written confirmation by purchase order, executed Agreement or other written instruction issued by the TIPS Member for any renewal period. The purpose of this clause is to avoid a TIPS Member inadvertently renewing an Agreement during a period in which the governing body of the TIPS Member has not properly appropriated and budgeted the funds to satisfy the Agreement renewal. This term is not negotiable and any Agreement between a TIPS Member and a TIPS awarded vendor with an automatic renewal clause that conflicts with these terms is rendered void and unenforceable.

Shipments
The Vendor shall ship, deliver or provide ordered products or services within a commercially reasonable time after the receipt of the order from the TIPS Member. If a delay in said delivery is anticipated, the Vendor shall notify TIPS Member as to why delivery is delayed and shall provide an estimated time for completion of the order. TIPS or the requesting entity may cancel the order if estimated delivery time is not acceptable or not as agreed by the parties.

Invoices
Each invoice or pay request shall include the TIPS Member's purchase order number or other identifying designation as provided in the order by the TIPS Member. If applicable, the shipment tracking number or pertinent information for verification of TIPS Member receipt shall be made available upon request.

Payments
The TIPS Member will make payments directly to the Vendor, the Vendor Assigned Dealer or as agreed by the Vendor and the TIPS Member after receiving invoice and in compliance with applicable payment statute(s), whichever is the greater time or as otherwise provided by an agreement of the parties.

Pricing
Price increases will be honored according to the terms of the solicitation. All pricing submitted to TIPS shall include the participation fee, as provided in the solicitation, to be remitted to TIPS by the Vendor. Vendor will not show adding the fee to the invoice presented to TIPS Member customer.

Participation Fees and Reporting of Sales to TIPS by Vendor
The Participation Fee that was published as part of the Solicitation and the fee published is the legally effective fee, along with any fee conditions stated in the Solicitation. Collection of the fees by TIPS is required under Texas Government Code §791.011 Et seq. Fees are due on all TIPS purchases reported by either Vendor or Member. Fees are due to TIPS upon payment by the Member to the Vendor, Reseller or Vendor Assigned Dealer. Vendor, Reseller or Vendor Assigned Dealer agrees that the participation fee is due to TIPS for all Agreement sales immediately upon receipt of payment including partial payment, from the Member Entity and must be paid to TIPS at least on a monthly basis, specifically within 31 calendar days of receipt of payment, if not more frequently, or as otherwise agreed by TIPS in writing and signed by an authorized signatory of TIPS. Thus, when an awarded Vendor, Reseller or Vendor Assigned Dealer receives any amount of payment, even partial payment, for a TIPS sale, the legally effective fee for that amount is immediately due to TIPS from the Vendor and fees due to TIPS should be paid at least on a monthly basis, specifically within 31 calendar days of receipt of payment, if not more frequently.

Reporting of Sales to TIPS by Vendor
Vendor is required to report all sales under the TIPS contract to TIPS. When a public entity initiates a purchase with a TIPS Awarded Vendor, if the Member inquires verbally or in writing whether the Vendor holds a TIPS Contract, it is the duty of the Vendor to verify whether or not the Member is seeking a TIPS purchase. Once verified, the Vendor must include the TIPS Contract number on any communications and related sales documents exchanged with the TIPS Member entity. To report sales, the Vendor must login to the TIPS Vendor Portal online at https://www.tips-usa.com/vendors_form.cfm and click on the PO's and Payments tab. Pages 3-7 of the Vendor Portal User Guide will walk you through the process of reporting sales to TIPS. Please refer to the TIPS Accounting FAQ's for more information about reporting sales and if you have further questions, contact the Accounting Team at accounting@tips-usa.com. The Vendor or vendor assigned dealers are responsible for keeping record of all sales that go through the TIPS Agreement and submitting same to TIPS. Failure to render the participation fee to TIPS shall constitute a breach of this agreement with our parent governmental entity, Texas Education Service Center Region 8, as established by the Texas legislature and shall be grounds for termination of this agreement and any other agreement held with TIPS and possible legal action. Any overpayment of participation fees to TIPS by a Vendor will be refunded to the Vendor within ninety (90) days of receipt of notification if TIPS receives written notification of the overpayment not later than the expiration of six (6) months from the date of overpayment and TIPS determines that the amount was not legally due to TIPS pursuant to this agreement and applicable law. It is the Vendor's responsibility to identify which sales are TIPS Agreement sales and pay the correct participation fee due for TIPS Agreement sales. Any notification of overpayment received by TIPS after the expiration of six (6) months from the date of overpayment will be non-refundable. Region 8 ESC and TIPS reserve the right to extend the six (6) month deadline to notify if approved by the Region 8 ESC Board of Directors. TIPS reserves all rights under the law to collect the fees due. Please contact TIPS at tips@tips-usa.com or call (866) 839-8477 if you have questions about paying fees.

Indemnity
The Vendor agrees to indemnify and hold harmless and defend TIPS, TIPS Member(s), officers and employees from and against all claims and suits by third parties for damages, injuries to persons (including death),

property damages, losses, and expenses including court costs and reasonable attorney's fees, arising out of, or resulting from, Vendor's performance under this Agreement, including all such causes of action based upon common, constitutional, or statutory law, or based in whole or in part, upon allegations of negligent or intentional acts on the part of the Vendor, its officers, employees, agents, subcontractors, licensees, or invitees. Parties found liable shall pay their proportionate share of damages as agreed by the parties or as ordered by a court of competent jurisdiction over the case. **NO LIMITATION OF LIABILITY FOR DAMAGES FOR PERSONAL INJURY OR PROPERTY DAMAGE ARE PERMITTED OR AGREED BY TIPS/ESC REGION 8.** Per Texas Education Code §44.032(f), and pursuant to its requirements only, reasonable Attorney's fees are recoverable by the prevailing party in any dispute resulting in litigation.

State of Texas Franchise Tax

By signature hereon, the Vendor hereby certifies that he/she is not currently delinquent in the payment of any franchise taxes owed the State of Texas under Chapter 171, Tax Code.

Miscellaneous

The Vendor acknowledges and agrees that continued participation in TIPS is subject to TIPS sole discretion and that any Vendor may be removed from the participation in the Program at any time with or without cause. Nothing in the Agreement or in any other communication between TIPS and the Vendor may be construed as a guarantee that TIPS or TIPS Members will submit any orders at any time. TIPS reserves the right to request additional proposals for items or services already on Agreement at any time.

Purchase Order Pricing/Product Deviation

If a deviation of pricing/product on a Purchase Order or contract modification occurs between the Vendor and the TIPS Member, TIPS must be notified within five (5) business days of receipt of change order.

Termination for Convenience of TIPS Agreement Only

TIPS reserves the right to terminate this agreement for cause or no cause for convenience with a thirty (30) days prior written notice. Termination for convenience is conditionally required under Federal Regulations 2 CFR part 200 if the customer is using federal funds for the procurement. All purchase orders presented to the Vendor, but not fulfilled by the Vendor, by a TIPS Member prior to the actual termination of this agreement shall be honored at the option of the TIPS Member. The awarded Vendor may terminate the agreement with ninety (90) days prior written notice to TIPS 4845 US Hwy North, Pittsburg, Texas 75686. The vendor will be paid for goods and services delivered prior to the termination provided that the goods and services were delivered in accordance with the terms and conditions of the terminated agreement. This termination clause does not affect the sales agreements executed by the Vendor and the TIPS Member customer pursuant to this agreement. TIPS Members may negotiate a termination for convenience clause that meets the needs of the transaction based on applicable factors, such as funding sources or other needs.

TIPS Member Purchasing Procedures

Usually, purchase orders or their equal are issued by participating TIPS Member to the awarded vendor and should indicate on the order that the purchase is per the applicable TIPS Agreement Number. Orders are typically emailed to TIPS at tipspo@tips-usa.com.

- Awarded Vendor delivers goods/services directly to the participating member.
- Awarded Vendor invoices the participating TIPS Member directly.
- Awarded Vendor receives payment directly from the participating member.
- Fees are due to TIPS upon payment by the Member to the Vendor. Vendor agrees to pay the participation fee to TIPS for all Agreement sales upon receipt of payment including partial payment, from

the Member Entity or as otherwise agreed by TIPS in writing and signed by an authorized signatory of TIPS.

Licenses

Awarded Vendor shall maintain, in current status, all federal, state and local licenses, bonds and permits required for the operation of the business conducted by awarded Vendor. Awarded Vendor shall remain reasonably fully informed of and in compliance with all ordinances and regulations pertaining to the lawful provision of goods or services under the Agreement. TIPS and TIPS Members reserves the right to stop work and/or cancel an order or terminate this or any other sales Agreement of any awarded Vendor whose license(s) required for performance under this Agreement have expired, lapsed, are suspended or terminated subject to a 30-day cure period unless prohibited by applicable statue or regulation.

Novation

If awarded Vendor sells or transfers all assets, rights or the entire portion of the assets or rights required to perform this Agreement, a successor in interest must guarantee to perform all obligations under this Agreement. A simple change of name agreement will not change the Agreement obligations of awarded vendor. TIPS will consider Contract Assignments on a case by case basis. TIPS must be notified within five (5) business days of the transfer of assets or rights.

Site Requirements (*only when applicable to service or job*)

Cleanup: When performing work on site at a TIPS Member's property, awarded Vendor shall clean up and remove all debris and rubbish resulting from their work as required or directed by TIPS Member or as agreed by the parties. Upon completion of work, the premises shall be left in good repair and an orderly, neat, clean and unobstructed condition.

Preparation: Awarded Vendor shall not begin a project for which TIPS Member has not prepared the site, unless awarded Vendor does the preparation work at no cost, or until TIPS Member includes the cost of site preparation in a purchase order. Site preparation includes, but is not limited to: moving furniture, installing wiring for networks or power, and similar pre-installation requirements.

Registered sex offender restrictions: For work to be performed at schools, awarded Vendor agrees that no employee of a subcontractor who has been adjudicated to be a registered sex offender will perform work at any time when students are, or reasonably expected to be, present unless otherwise agreed by the TIPS Member. Awarded Vendor agrees that a violation of this condition shall be considered a material breach and may result in the cancellation of the purchase order at the TIPS Member's discretion. Awarded Vendor must identify any additional costs associated with compliance of this term. If no costs are specified, compliance with this term will be provided at no additional charge. **Safety measures:** Awarded Vendor shall take all reasonable precautions for the safety of employees on the worksite, and shall erect and properly maintain all necessary safeguards for protection of workers and the public. Awarded Vendor shall post warning signs against all hazards created by the operation and work in progress. Proper precautions shall be taken pursuant to state law and standard practices to protect workers, general public and existing structures from injury or damage.

Safety Measures

Awarded Vendor shall take all reasonable precautions for the safety of employees on the worksite, and shall erect and properly maintain all necessary safeguards for protection of workers and the public. Awarded vendor shall post warning signs against all hazards created by the operation and work in progress. Proper precautions shall be taken pursuant to state law and standard practices to protect workers, general public and existing structures from injury or damage.

Smoking
Persons working under Agreement shall adhere to the TIPS Member's or local smoking statutes, codes or policies.

Marketing
Awarded Vendor agrees to allow TIPS to use their name and logo within TIPS website, marketing materials and advertisement subject to any reasonable restrictions provided to TIPS in the Proposal to the Solicitation. The Vendor may submit an acceptable use directive for Vendor's names and logos with which TIPS agrees to comply. Any use of TIPS name and logo or any form of publicity, inclusive of press release, regarding this Agreement by awarded vendor must have prior approval from TIPS which will not be unreasonably withheld. Request may be made by email to TIPS@TIPS-USA.COM.

Supplemental Agreements
The TIPS Member entity participating in the TIPS Agreement and awarded Vendor may enter into a separate Supplemental Agreement or contract to further define the level of service requirements over and above the minimum defined in this Agreement such as but not limited to, invoice requirements, ordering requirements, specialized delivery, etc. Any Supplemental Agreement or contract developed as a result of this Agreement is exclusively between the TIPS Member entity customer and the Vendor. TIPS, its agents, TIPS Members and employees not a party to the Supplemental Agreement with the TIPS Member customer, shall not be made party to any claim for breach of such agreement unless named and agreed by the Party in question in writing in the agreement. If a Vendor submitting a Proposal requires TIPS and/or TIPS Member to sign an additional agreement, those agreements shall comply with the award made by TIPS to the Vendor. Supplemental Vendor's Agreement documents may not become part of TIPS' Agreement with Vendor unless and until an authorized representative of TIPS reviews and approves it. TIPS review and approval may be at any time during the life of this Vendor Agreement. TIPS permits TIPS Members to negotiate additional terms and conditions with the Vendor for the provision of goods or services under the Vendor's TIPS Agreement so long as they do not materially conflict with this Agreement.

Survival Clause
All applicable sales, leases, Supplemental Agreements, contracts, software license agreements, warranties or service agreements that were entered into between Vendor and TIPS or the TIPS Member Customer under the terms and conditions of this Agreement shall survive the expiration or termination of this Agreement. All Orders, Purchase Orders issued or contracts executed by TIPS or a TIPS Member and accepted by the Vendor prior to the expiration or termination of this agreement, shall survive expiration or termination of the Agreement, subject to previously agreed terms and conditions agreed by the parties or as otherwise specified herein relating to termination of this agreement.

Legal obligations
It is the responding Vendor's responsibility to be aware of and comply with all local, state and federal laws governing the sale of products/services identified in the applicable Solicitation that resulted in this Vendor Agreement and any awarded Agreement thereof. Applicable laws and regulations must be followed even if not specifically identified herein.

Audit rights
Due to transparency statutes and public accountability requirements of TIPS and TIPS Members', the awarded Vendor shall, at their sole expense, maintain appropriate due diligence of all purchases made by TIPS Member that utilizes this Agreement. TIPS and Region 8 ESC each reserve the right to audit the accounting of TIPS related purchases for a period of three (3) years from the time such purchases are made.

This audit right shall survive termination of this Agreement for a period of one (1) year from the effective date of termination. In order to ensure and confirm compliance with this agreement, TIPS shall have authority to conduct audits of Awarded Vendor's pricing or TIPS transaction documentation with TIPS Members with 30 days' notice unless the audit is ordered by a Court Order or by a Government Agency with authority to do so without notice. Notwithstanding the foregoing, in the event that TIPS is made aware of any pricing being offered to eligible entities that is materially inconsistent with the pricing under this agreement, TIPS shall have the ability to conduct the audit internally or may engage a third- party auditing firm to investigate any possible non- compliant conduct or may terminate the Agreement according to the terms of this Agreement. In the event of an audit, the requested materials shall be reasonably provided in the time, format and at the location acceptable to Region 8 ESC or TIPS. TIPS agrees not to perform a random audit the TIPS transaction documentation more than once per calendar year, but reserves the right to audit for just cause or as required by any governmental agency or court with regulatory authority over TIPS or the TIPS Member.

Force Majeure

If by reason of Force Majeure, either party hereto shall be rendered unable wholly or in part to carry out its obligations under this Agreement then such party shall give notice and full particulars of Force Majeure in writing to the other party within a reasonable time after occurrence of the event or cause relied upon, and the obligation of the party giving such notice, so far as it is affected by such Force Majeure, shall be suspended during the continuance of the inability then claimed, except as hereinafter provided, but for no longer period, and such party shall endeavor to remove or overcome such inability with all reasonable dispatch.

Choice of Law

The Agreement between the Vendor and TIPS/ESC Region 8 and any addenda or other additions resulting from this procurement process, however described, shall be governed by, construed and enforced in accordance with the laws of the State of Texas, regardless of any conflict of laws principles.

Venue, Jurisdiction and Service of Process

Any Proceeding arising out of or relating to this procurement process or any contract issued by TIPS resulting from or any contemplated transaction shall be brought in a court of competent jurisdiction in Camp County, Texas and each of the parties irrevocably submits to the exclusive jurisdiction of said court in any such proceeding, waives any objection it may now or hereafter have to venue or to convenience of forum, agrees that all claims in respect of the Proceeding shall be heard and determined only in any such court, and agrees not to bring any proceeding arising out of or relating to this procurement process or any contract resulting from or any contemplated transaction in any other court. The parties agree that either or both of them may file a copy of this paragraph with any court as written evidence of the knowing, voluntary and freely bargained for agreement between the parties irrevocably to waive any objections to venue or to convenience of forum. Process in any Proceeding referred to in the first sentence of this Section may be served on any party anywhere in the world. Venue for any dispute resolution process, other than litigation, between TIPS and the Vendor shall be located in Camp or Titus County, Texas.

Project Delivery Order Procedures

The TIPS Member having approved and signed an interlocal agreement, or other TIPS Membership document, may make a request of the awarded Vendor under this Agreement when the TIPS Member desires goods or services awarded to the Vendor. Notification may occur via phone, the web, courier, email, fax, or in person. Upon notification of a pending request, the awarded Vendor shall acknowledge the TIPS Member's request as soon as possible, but must make contact with the TIPS Member within two working

days.

Status of TIPS Members as Related to This Agreement
TIPS Members stand in the place of TIPS as related to this agreement and have the same access to the proposal information and all related documents. TIPS Members have all the same rights under the awarded Agreement as TIPS.

Vendor's Resellers as Related to This Agreement
Vendor's Named Resellers ("Resellers") under this Agreement shall comply with all terms and conditions of this agreement and all addenda or incorporated documents. All actions related to sales by Authorized Vendor's Resellers under this Agreement are the responsibility of the awarded Vendor. If Resellers fail to report sales to TIPS under your Agreement, the awarded Vendor is responsible for their contractual failures and shall be billed for the fees. The awarded Vendor may then recover the fees from their named reseller.

Support Requirements
If there is a dispute between the awarded Vendor and TIPS Member, TIPS or its representatives may, at TIPS sole discretion, assist in conflict resolution if requested by either party. TIPS, or its representatives, reserves the right to inspect any project and audit the awarded Vendor's TIPS project files, documentation and correspondence related to the requesting TIPS Member's order. If there are confidentiality requirements by either party, TIPS shall comply to the extent permitted by law.

Incorporation of Solicitation
The TIPS Solicitation which resulted in this Vendor Agreement, whether a Request for Proposals, the Request for Competitive Sealed Proposals or Request for Qualifications solicitation, or other, the Vendor's response to same and all associated documents and forms made part of the solicitation process, including any addenda, are hereby incorporated by reference into this Agreement as if copied verbatim.

SECTION HEADERS OR TITLES
THE SECTON HEADERS OR TITLES WITHIN THIS DOCUMENT ARE MERELY GUIDES FOR CONVENIENCE AND ARE NOT FOR CLASSIFICATION OR LIMITING OF THE RESPONSIBILITES OF THE PARTIES TO THIS DOCUMENT.

STATUTORY REQUIREMENTS
Texas governmental entities are prohibited from doing business with companies that fail to certify to this condition as required by Texas Government Code Sec. 2270.

By executing this agreement, you certify that you are authorized to bind the undersigned Vendor and that your company (1) does not boycott Israel; and (2) will not boycott Israel during the term of the Agreement.

You certify that your company is not listed on and does not and will not do business with companies that are on the Texas Comptroller of Public Accounts list of Designated Foreign Terrorists Organizations per Texas Gov't Code 2270.0153 found at https://comptroller.texas.gov/purchasing/docs/foreign-terrorist.pdf

You certify that if the certified statements above become untrue at any time during the life of this Agreement that the Vendor will notify TIPS within three (3) business day of the change by a letter on Vendor's letterhead from and signed by an authorized representative of the Vendor stating the non-compliance decision and the TIPS Agreement number and description at:

Attention: General Counsel
ESC Region 8/The Interlocal Purchasing System (TIPS)
4845 Highway 271 North
Pittsburg, TX,75686
And by an email sent to bids@tips-usa.com

Insurance Requirements

The undersigned Vendor agrees to maintain the below minimum insurance requirements for TIPS Contract Holders:

General Liability	$1,000,000 each Occurrence/ Aggregate
Automobile Liability	$300,000 Includes owned, hired & non-owned
Workers' Compensation	Statutory limits for the jurisdiction in which the Vendor performs under this Agreement.
Umbrella Liability	$1,000,000

When the Vendor or its subcontractors are liable for any damages or claims, the Vendor's policy, when the Vendor is responsible for the claim, must be primary over any other valid and collectible insurance carried by the Member. Any immunity available to TIPS or TIPS Members shall not be used as a defense by the contractor's insurance policy. The coverages and limits are to be considered minimum requirements and in no way limit the liability of the Vendor(s). Insurance shall be written by a carrier with an A-; VII or better rating in accordance with current A.M. Best Key Rating Guide. Only deductibles applicable to property damage are acceptable, unless proof of retention funds to cover said deductibles is provided. "Claims made" policies will not be accepted. Vendor's required minimum coverage shall not be suspended, voided, cancelled, non-renewed or reduced in coverage or in limits unless replaced by a policy that provides the minimum required coverage except after thirty (30) days prior written notice by certified mail, return receipt requested has been given to TIPS or the TIPS Member if a project or pending delivery of an order is ongoing. Upon request, certified copies of all insurance policies shall be furnished to the TIPS or the TIPS Member.

Special Terms and Conditions

- **Orders:** All Vendor orders received from TIPS Members must be emailed to TIPS at tipspo@tips-usa.com. Should a TIPS Member send an order directly to the Vendor, it is the Vendor's responsibility to forward a copy of the order to TIPS at the email above within 3 business days and confirm its receipt with TIPS.
- **Vendor Encouraging Members to bypass TIPS agreement:** Encouraging TIPS Members to purchase directly from the Vendor or through another agreement, when the Member has requested using the TIPS cooperative Agreement or price, and thereby bypassing the TIPS Agreement is a violation of the terms and conditions of this Agreement and will result in removal of the Vendor from the TIPS Program.
- **Order Confirmation**: All TIPS Member Agreement orders are approved daily by TIPS and sent to the Vendor. The Vendor should confirm receipt of orders to the TIPS Member (customer) within 3 business days.
- **Vendor custom website for TIPS**: If Vendor is hosting a custom TIPS website, updated pricing when

effective. TIPS shall be notified when prices change in accordance with the award.

- **Back Ordered Products**: If product is not expected to ship within the time provided to the TIPS Member by the Vendor, the Member is to be notified within 3 business days and appropriate action taken based on customer request.

The TIPS Vendor Agreement Signature Page is inserted here.

TIPS Vendor Agreement Signature Form

RFP 210703 Staging, Enclosure, and Riser Products and Services (2 PART with JOC)
PART 1 ONLY

Company Name Trex Commercial Products, Inc. dba Staging Concepts

Address 7008 Northland Drive, Suite 150

City Minneapolis State MN Zip 55428

Phone 763-553-2094 Fax 763-553-2096

Email of Authorized Representative tmeister@stagingconcepts.com

Name of Authorized Representative Tracy Meister

Title Sr. Sales/Project Coordinator

Signature of Authorized Representative Tracy Meister Digitally signed by Tracy Meister
DN: C=US,
E=tmeister@stagingconcepts.com,
O=Staging Concepts, CN=Tracy Meister
Date: 2021.08.12 15:38:14-05'00'

Date 08/16/21

TIPS Authorized Representative Name David Fitts

Title Executive Director

TIPS Authorized Representative Signature David Wayne Fitts

Approved by ESC Region 8 David Wayne Fitts

Date 9-23-2021

Addendum to TIPS Vendor Agreement executed on or after September 1, 2021

Insert name of Vendor Trex Commercial Products, Inc. dba Staging Concepts **TIPS Solicitation #** 210703 P1

CERTIFICATION REGARDING BOYCOTTING CERTAIN ENERGY COMPANIES

If (a) company is not a sole proprietorship; (b) company has ten (10) or more full-time employees; and (c) this contract has a value of $100,000 or more that is to be paid wholly or partly from public funds, the following certification shall apply; otherwise, this certification is not required. Pursuant to TEX. GOV'T CODE Ch. 2274 of SB 13 (87th session), the company hereby certifies and verifies that the company, or any wholly owned subsidiary, majority-owned subsidiary, parent company, or affiliate of these entities or business associations, if any, does not boycott energy companies and will not boycott energy companies during the term of the contract. For purposes of this contract, the term "company" shall mean an organization, association, corporation, partnership, joint venture, limited partnership, limited liability partnership, or limited liability company, that exists to make a profit. The term "boycott energy company" shall mean "without an ordinary business purpose, refusing to deal with, terminating business activities with, or otherwise taking any action intended to penalize, inflict economic harm on, or limit commercial relations with a company because the company (a) engages in the exploration, production, utilization, transportation, sale, or manufacturing of fossil fuel-based energy and does not commit or pledge to meet environmental standards beyond applicable federal and state law, or (b) does business with a company described by paragraph (a)." *See* TEX. GOV'T CODE § 809.001(1).

TM _____ **Initials of Authorized Representative of Vendor, if applicable**

CERTIFICATION PROHIBITING DISCRIMINATION AGAINST FIREARM AND AMMUNITION INDUSTRIES

If (a) company is not a sole proprietorship; (b) company has at least ten (10) full-time employees; (c) this contract has a value of at least $100,000 that is paid wholly or partly from public funds; (d) the contract is not excepted under TEX. GOV'T CODE § 2274.003 of SB 19 (87th leg.); and (e) governmental entity has determined that company is not a sole-source provider or governmental entity has not received any bids from a company that is able to provide this written verification, the following certification shall apply; otherwise, this certification is not required. Pursuant to TEX. GOV'T CODE Ch. 2274 of SB 19 (87th session), the company hereby certifies and verifies that the company, or association, corporation, partnership, joint venture, limited partnership, limited liability partnership, or limited liability company, including a wholly owned subsidiary, majority-owned subsidiary parent company, or affiliate of these entities or associations, that exists to make a profit, does not have a practice, policy, guidance, or directive that discriminates against a firearm entity or firearm trade association and will not discriminate during the term of this contract against a firearm entity or firearm trade association. For purposes of this contract, "discriminate against a firearm entity or firearm trade association" shall mean, with respect to the entity or association, to: "(1) refuse to engage in the trade of any goods or services with the entity or association based solely on its status as a firearm entity or firearm trade association; (2) refrain from continuing an existing business relationship with the entity or association based solely on its status as a firearm entity or firearm trade association; or (3) terminate an existing business relationship with the entity or association based solely on its status as a firearm entity or firearm trade association. *See* TEX. GOV'T CODE § 2274.001(3) of SB 19. "Discrimination against a firearm entity or firearm trade association" does not include: "(1) the established policies of a merchant, retail seller, or platform that restrict or prohibit the listing or selling of ammunition, firearms, or firearm accessories; and (2) a company's refusal to engage in the trade of any goods or services, decision to refrain from continuing an existing business relationship, or decision to terminate an existing business relationship to comply with federal, state, or local law, policy, or regulations or a directive by a regulatory agency, or for any traditional business reason that is specific to the customer or potential customer and not based solely on an entity's or association's status as a firearm entity or firearm trade association." *See* TEX. GOV'T CODE § 2274.001(3) of SB 19.

TM _____ **Initials of Authorized Representative of Vendor, if applicable**

CERTIFICATION REGARDING CERTAIN FOREIGN-OWNED COMPANIES IN CONNECTION WITH CRITICAL INFRASTRUCTURE

Client name is prohibited from entering into a contract or other agreement relating to critical infrastructure that would grant to the company direct or remote access to or control of critical infrastructure in this state, excluding access specifically allowed by the *client name* for product warranty and support purposes. Company, certifies that neither it nor its parent company nor any affiliate of company or its parent company, is (1) owned by or the majority of stock or other ownership interest of the company is held or controlled by individuals who are citizens of China, Iran, North Korea, Russia, or a designated country; (2) a company or other entity, including governmental entity, that is owned or controlled by citizens of or is directly controlled by the government of China, Iran, North Korea, Russia, or a designated country; or (3) headquartered in China, Iran, North Korea, Russia, or a designated country. For purposes of this contract, "critical infrastructure" means "a communication infrastructure system, cybersecurity system, electric grid, hazardous waste treatment system, or water treatment facility." *See* TEX. GOV'T CODE § 2274.0101(2) of SB 1226 (87th leg.). The company verifies and certifies that company will not grant direct or remote access to or control of critical infrastructure, except for product warranty and support purposes, to prohibited individuals, companies, or entities, including governmental entities, owned, controlled, or headquartered in China, Iran, North Korea, Russia, or a designated country, as determined by the Governor.

TM _____ **Initials of Authorized Representative of Vendor, if applicable**

NOTICE TO MEMBERS REGARDING ATTRIBUTE RESPONSES

TIPS VENDORS RESPOND TO ATTRIBUTE QUESTIONS AS PART OF TIPS COMPETITIVE SOLICITATION PROCESS. THE VENDOR'S RESPONSES TO ATTRIBUTE QUESTIONS ARE INCLUDED HEREIN AS "SUPPLIER RESPONSE." PLEASE BE ADVISED THAT DEVIATIONS, IF ANY, IN VENDOR'S RESPONSE TO ATTRIBUTE QUESTIONS MAY NOT REFLECT VENDOR'S FINAL ATTRIBUTE RESPONSE, WHICH IS SUBJECT TO NEGOTIATIONS PRIOR TO AWARD. PLEASE CONTACT THE TIPS OFFICE AT 866-839-8477 WITH QUESTIONS OR CONCERNS REGARDING VENDOR ATTRIBUTE RESPONSE DEVIATIONS. PLEASE KEEP IN MIND THAT TIPS DOES NOT PROVIDE LEGAL COUNSEL TO MEMBERS. TIPS RECOMMENDS THAT YOU CONSULT YOUR LEGAL COUNSEL WHEN EXECUTING CONTRACTS WITH OR MAKING PURCHASES FROM TIPS VENDORS.

210703 Addendum 1
Staging Concepts, Inc.
Trex Commercial Products, Inc.
Supplier Response

Event Information

Number: 210703 Addendum 1
Title: Staging, Enclosure, and Riser Products and Services
Type: Request for Proposal
Issue Date: 7/1/2021
Deadline: 8/20/2021 03:00 PM (CT)
Notes: This is a 2 PART solicitation. PART 1 is for projects that are not considered construction or a public work. It includes, but is not limited to, parts, supplies, maintenance services and repairs. PART 2 Job Order Contract (JOC) is for projects considered construction or public work projects. The determination of whether or not a project requires a PART 2 JOC is the responsibility of the TIPS member entity. Vendors are encouraged to respond to BOTH PARTS 1 and 2 to meet the needs of our members, but responses to both parts is not required.

Contact Information

Address: Region 8 Education Service Center
4845 US Highway 271 North
Pittsburg, TX 75686
Phone: +1 (866) 839-8477
Email: bids@tips-usa.com

Staging Concepts, Inc. Information

Address: 8400 Wyoming Ave N
Suite 100
Brooklyn Park, MN 55445
Phone: (763) 999-4417

By submitting your response, you certify that you are authorized to represent and bind your company.

Tracy Meister
Signature

tmeister@stagingconcepts.com
Email

Submitted at 8/16/2021 2:23:09 PM

Requested Attachments

Agreement Signature Form PART 1 ONLY

210703 Agreement Signature Form PART 1 ONLY 08-03-21-Signed.pdf

If you have not taken exception or deviation to the agreement language in the solicitation attributes, download the AGREEMENT SIGNATURE FORM from the "ATTACHMENTS" tab. This PDF document is a fillable form. Download the document to your computer, fill in the requested company information, print the file, SIGN the form, SCAN the completed and signed AGREEMENT SIGNATURE FORM, and upload here.
If you have taken exception to any of the agreement language and noted the exception in the deviations section of the attributes for the agreement, complete the AGREEMENT SIGNATURE FORM, but DO NOT SIGN until those deviations have been negotiated and resolved with TIPS management. Upload the unsigned form here, because this is a required document.

Vendor Agreement PART 1 ONLY

210703 Vendor Agreement - PART 1 ONLY signed.pdf

The vendor must download the Vendor Agreement from the attachment tab, fill in the requested information and upload the completed agreement.
DO NOT UPLOAD encrypted or password protected files.

Vendor Agreement PART 2 ONLY

210703 Vendor Agreement JOC_PART 2 ONLY signed.pdf

If proposing on Part 2, the vendor must download the Vendor Agreement from the attachment tab, fill in the requested information and upload the completed agreement.
DO NOT UPLOAD encrypted or password protected files.

Agreement Signature Form PART 2 ONLY

210703 Agreement Signature Form PART 2 ONLY08-03-21 Signed.pdf

If proposing on Part 2, the vendor must download the Vendor Agreement from the attachment tab, fill in the requested information and upload the completed agreement.
DO NOT UPLOAD encrypted or password protected files.

Pricing Form 1 PART 1 ONLY

210703 Pricing Form 1 PART 1 ONLY 08-10-21.xlsx

The vendor must download the PRICING SPREADSHEET SHEET from the attachment tab, fill in the requested information and upload the completed spreadsheet.
DO NOT UPLOAD encrypted or password protected files.

Pricing Form 2 PART 1 ONLY

210703 Pricing Form 2 PART 1 ONLY 08-10-21.xlsx

The vendor must download the PRICING SPREADSHEET SHEET from the attachment tab, fill in the requested information and upload the completed spreadsheet.
DO NOT UPLOAD encrypted or password protected files.

OPTIONAL - PART 2 - JOC Pricing of Itemized List of RS Means Non-Prepriced Items

TIPS #210703 Staging Concepts Price List 08-12-21 TIPS DISCOUNT.pdf

The Vendor may download the optional Pricing of Itemized List of RS Means Non-Prepriced Items form from the attachment tab, fill in the requested information, and upload the completed spreadsheet. DO NOT UPLOAD encrypted or password protected files.

Reference Form (PARTS 1 & 2)

Reference Form (PARTS 1 & 2) 08-03-21.xls

Valid Reference Email addresses are REQUIRED on the spreadsheet. The vendor must download the References spreadsheet from the attachment tab, fill in the requested information and upload the completed spreadsheet. DO NOT UPLOAD encrypted or password protected files.

Proposed Goods and Services

All Product Sheets.pdf

Please upload one or more documents or sheets describing your offerings, line cards, catalogs, links to offerings OR list links to your offerings that illustrate the catalog of proposed lines of goods and or services you carry and offer under this proposal. It does not have to be exhaustive but should, at a minimum tell us what you are offering. It could be as simple as a sheet with your link to your online catalog of goods and services.

D/M/WBE Certification OPTIONAL

No response

D/M/WBE Certification documentation may be scanned and uploaded if you desire to claim your status as one of the identified enterprises. (Disadvantaged Business Enterprise, Minority Business Enterprise and/or Woman Business Enterprise) If vendor has more than one certification scan into one document. (PDF Format ONLY)
DO NOT UPLOAD encrypted or password protected files.

Warranty

No response

Warranty information (if applicable) must be scanned and uploaded. (PDF Format ONLY)
DO NOT UPLOAD encrypted or password protected files.

Supplementary

No response

Supplementary information can be scanned and uploaded. (Company information, brochures, catalogs, etc.) (PDF Format ONLY)
DO NOT UPLOAD encrypted or password protected files.

All Other Certificates

No response

All Other Certificates (if applicable) must be scanned and uploaded. If vendor has more than one other certification scan into one document. (PDF Format ONLY)
DO NOT UPLOAD encrypted or password protected files.

Logo and Other Company Marks

No response

Conflict of Interest Form CIQ- ONLY REQUIRED IF A CONFLICT EXISTS PER THE INSTRUCTIONS

No response

ONLY REQUIRED IF A CONFLICT EXISTS PER THE INSTRUCTIONS
Conflict of Interest Form for Vendors that are required to submit the form. The Conflict of Interest Form is included in the Base documents or can be found at https://www.tips-usa.com/assets/documents/docs/CIQ.pdf.

Certificate of Corporate Offerer - COMPLETE ONLY IF OFFERER IS A CORPORATION

No response

COMPLETE AND UPLOAD FORM IN ATTACHMENTS SECTION ONLY IF OFFERER IS A CORPORATION

Lobbying Report Standard Form-LLL, “disclosure Form to Report Lobbying,”

No response

If you answered "I HAVE Lobbied per above" to attribute #66, please download and complete and upload the Standard Form-LLL, “disclosure Form to Report Lobbying,” in the Response attachments section.

Confidentiality Form

Required Confidential Information Status Form Signed.pdf

REQUIRED CONFIDENTIALITY FORM. Complete the form according to your company requirements, make any desired attachments and upload to the appropriate section under "Response Attachments" THIS FORM DETERMINES HOW ESC8/TIPS RESPONDS TO LEGAL PUBLIC INFORMATION REQUESTS.

Bonding Capacity Letter from Surety/Insurance Company Trex MMA dba Staging Concepts.pdf

REQUIRED IF YOU ARE PROPOSING ON PART 2 -Attach the Bonding Capacity Letter from Surety/Insurance Company. if you do not have one available at time of proposal, attached a letter stating it will be submitted when received to prove bonding capacity. No award can be made until official bonding capacity letter is received by TIPS.

Current W-9 Tax Form W-9 TCP 7008 Northland Dr-2021.pdf

You are required by TIPS to upload a current W-9 Internal Revenue Service (IRS) Tax Form for your entity. This form will be utilized by TIPS to properly identify your entity.

Response Attachments

W-9 TCP 7008 Northland Dr-2021.pdf

W9

Trex evidence of GL Auto insurance 2020-2021.pdf

Sample GL/Auto Insurance

Trex evidence of WC insurance 20-21.pdf

Sample WC Insurance

Trex MMA dba Staging Concepts.pdf

Bonding Letter

STAGING_Vertical_logo_Trex (002).png

Staging Concepts Logo

Bid Attributes

1	**Yes - No** Disadvantaged/Minority/Women Business Enterprise - D/M/WBE (Required by some participating governmental entities) Vendor certifies that their firm is a D/M/WBE? Vendor must upload proof of certification to the ”Response Attachments” D/M/WBE CERTIFICATES section. No
2	**Yes - No** Historically Underutilized Business - HUB (Required by some participating governmental entities) Vendor certifies that their firm is a HUB as defined by the State of Texas at https://comptroller.texas.gov/purchasing/vendor/hub/ or in a HUBZone as defined by the US Small Business Administration at https://www.sba.gov/offices/headquarters/ohp Proof of one or both may be submitted. Vendor must upload proof of certification to the “Response Attachments” HUB CERTIFICATES section. No
3	**Yes - No** The Vendor can provide services and/or products to all 50 US States? Yes
4	**States Served:** If answer is NO to question #3, please list which states can be served. (Example: AR, OK, TX) *No response*

5 **Company and/or Product Description:**

This information will appear on the TIPS website in the company profile section, if awarded a TIPS contract. (Limit 750 characters.)

Staging Concepts is the industry leader in portable staging equipment. Since 1990, we’ve provided superior staging product solutions for facilities and venues with custom needs. Our company and team of devoted engineers strive to ensure that we produce the highest quality and most advanced modular, lightweight custom staging systems in the industry. Our products range from orchestra pit fillers, seating risers, performance stages, guardrail and handrail, stage traps, choral risers, acoustical ceiling panels, orchestra shells, ADA Infill platforms, and ADA Ramps.

6 **Primary Contact Name**

Primary Contact Name

Tracy Meister

7 **Primary Contact Title**

Primary Contact Title

Sr. Sales/Project Coordinator

8 **Primary Contact Email**

Primary Contact Email

tmeister@stagingconcepts.com

9 **Primary Contact Phone**

Enter 10 digit phone number. (No dashes or extensions)
Example: 8668398477

7639994417

10 **Primary Contact Fax**

Enter 10 digit phone number. (No dashes or extensions)
Example: 8668398477

7635532096

11 **Primary Contact Mobile**

Enter 10 digit phone number. (No dashes or extensions)
Example: 8668398477

7634062965

12 **Secondary Contact Name**

Secondary Contact Name

Adam Kopperud

13 **Secondary Contact Title**

Secondary Contact Title

Sales Manager

14 **Secondary Contact Email**

Secondary Contact Email

akopperud@stagingconcepts.com

15	**Secondary Contact Phone** Enter 10 digit phone number. (No dashes or extensions) Example: 8668398477 7632317108
16	**Secondary Contact Fax** Enter 10 digit phone number. (No dashes or extensions) Example: 8668398477 7635532096
17	**Secondary Contact Mobile** Enter 10 digit phone number. (No dashes or extensions) Example: 8668398477 7193223484
18	**Admin Fee Contact Name** Admin Fee Contact Name. This person is responsible for paying the admin fee to TIPS. Wendy Hubbell
19	**Admin Fee Contact Email** Admin Fee Contact Email whubbell@trexcommercial.com
20	**Admin Fee Contact Phone** Enter 10 digit phone number. (No dashes or extensions) Example: 8668398477 7635532094
21	**Purchase Order Contact Name** Purchase Order Contact Name. This person is responsible for receiving Purchase Orders from TIPS. Adam Kopperud
22	**Purchase Order Contact Email** Purchase Order Contact Email akopperud@stagingconcepts.com
23	**Purchase Order Contact Phone** Enter 10 digit phone number. (No dashes or extensions) Example: 8668398477 7632317108
24	**Company Website** Company Website (Format - www.company.com) www.stagingconcepts.com

25 Entity D/B/A's and Assumed Names

Please identify all of your entity's assumed names and D/B/A's. Please note that you will be identified publicly by the legal name under which you responded to this solicitation unless you organize otherwise with TIPS after award.

Staging Concepts

26 Primary Address

Primary Address

7008 Northland Drive, Suite 150

27 Primary Address City

Primary Address City

Minneapolis

28 Primary Address State

Primary Address State (2 Digit Abbreviation)

MN

29 Primary Address Zip

Primary Address Zip

55428

30 Search Words:

Please list search words to be posted in the TIPS database about your company that TIPS website users might search. Words may be product names, manufacturers, or other words associated with the category of award. YOU MAY NOT LIST NON-CATEGORY ITEMS. (Limit 500 words) (Format: product, paper, construction, manufacturer name, etc.)

Staging, portable staging, orchestra shells, orchestra enclosure, seating riser, choral risers, acoustical ceiling, theatrical equipment, ADA, black box, ADA ramps, guardrails, handrails, orchestra, stages, stage, auditorium, theatre, theater, black box, studio, performing, wenger, stageright, hussey, irwin

31 Do you want TIPS Members to be able to spend Federal grant funds with you if awarded? Is it your intent to be able to sell to our members regardless of the fund source, whether it be local, state or federal?

Most of our members receive Federal Government grants and they make up a significant portion of their budgets. The members need to know if your company is willing to sell to them when they spend federal budget funds on their purchase. There are attributes that follow that are provisions from the federal regulations in 2 CFR part 200. Your answers will determine if your award will be designated as Federal or Education Department General Administrative Regulations (EDGAR)compliant.

Do you want TIPS Members to be able to spend Federal grant funds with you if awarded and is it your intent to be able to sell to our members regardless of the fund source, whether it be local, state or federal?

Yes

32

Yes - No

Certification of Residency - The vendor's ultimate parent company or majority owner:

(A) has its principal place of business in Texas;

OR

(B) employs at least 500 persons in Texas?

This question is required as a data gathering function for information to our members making purchases with awarded vendors. Does not affect scoring with TIPS.

No

33

Company Residence (City)

Vendor's principal place of business is in the city of?

Minneapolis

34

Company Residence (State)

Vendor's principal place of business is in the state of?

MN

35

Discount Offered - CAUTION READ CAREFULLY BECAUSE VENDORS FREQUENTLY MAKE MISTAKES ON THIS ATTRIBUTE QUESTION

Remember this is a MINIMUM discount percentage so, be sure the discount percentage inserted here can be applied to ANY OFFERING OF GOODS OR SERVICES THROUGH OUT THE LIFE OF THE CONTRACT

CAUTION: BE CERTAIN YOU CAN HONOR THIS MINIMUM DISCOUNT PERCENTAGE ON ANY OFFERED SERVICE OR GOOD NOW OR DURING THE LIFE OF THE CONTRACT.

What is the MINIMUM percentage discount off of any item or service you offer to TIPS Members that is in your regular catalog (as defined in the solicitation specifications document), website, store or shelf pricing or when adding new goods or services to your offerings during the life of the contract? The resulting price of any goods or services Catalog list prices after this discount is applied is a ceiling on your pricing and not a floor because, in order to be more competitive in the individual circumstance, you may offer a larger discount depending on the items or services purchased and the quantity at time of sale.
Must answer with a number between 0% and 100%.

20%

36

MINIMUM Discount Term

Does the vendor agree to at least offer, for the life of the Agreement, the Minimum Discount Percentage off list or catalog proposed by Vendor in response to the Attribute entitled "Discount Offered - CAUTION READ CAREFULLY BECAUSE VENDORS FREQUENTLY MAKE MISTAKES ON THIS ATTRIBUTE QUESTION"? TIPS will utilize this response to satisfy the Long Term Cost scoring evaluation criteria. A "YES" answer will be awarded the maximum 10 points for this criterion out of the 100 total points and a "NO" answer is awarded 0 points.

YES

37

Yes - No

If awarded on Part 1 of the TIPS Contract, for the duration of the Contract, Vendor agrees to provide catalog pricing, as defined in the solicitation and below, to TIPS upon request for any goods and services offered on PART 1 of the Vendor's TIPS Contract, if any.

"Catalog" means the available list of tangible personal property or services, in the most current listing, regardless of date, during the life of the contract, that takes the form of a catalog, price list, schedule, shelf price or other form that:

A. is regularly maintained by the manufacturer or Vendor of an item; and
B. is either published or otherwise available for inspection by a customer during the purchase process;
C. to which the minimum discount proposed by the proposing Vendor may be applied.

YES

38

TIPS administration fee

By submitting a proposal, I agree that all pricing submitted to TIPS shall include the participation fee, as designated in the solicitation or as otherwise agreed in writing and shall be remitted to TIPS by the Vendor or the vendor's named resellers and as agreed in the Vendor agreement. I agree that the fee shall not and will not be added by the vendor as a separate line item on a TIPS member invoice, quote, proposal or any other written communications with the TIPS member.

39

REQUIRED FOR PART 2 JOC - PRICING OF Regular Hours Coefficient

What is your regular hours coefficient for the RS Means Price Book? (FAILURE TO RESPOND PROHIBITS PART 2 JOC EVALUATION)

Remember that this is a ceiling price proposed. You can discount lower than your proposed contract coefficient, but not higher.

This is one of three pricing questions that are required for consideration for award on this solicitation. Please consider your answer carefully. An explanation of the TIPS scoring of pricing is included in the attachments for your information.

The below is an Example of how pricing model works (not intended to influence your proposed coefficient, you should propose a coefficient that you determine is right for your business):

To propose the exact pricing as the RS Means Unit Price Book, you would insert a 1.0 and to propose a 5% discount for the RS Means Price Book would be a .95 regular hours coefficient and so on.

1

40

REQUIRED FOR PART 2 JOC - PRICING OF After Hours Coefficient

What is your after hours coefficient for the RS Means Price Book for work performed after normal working hours? (FAILURE TO RESPOND PROHIBITS PART 2 JOC EVALUATION)

Remember that this is a ceiling price proposed. You can discount to any TIPS Member customer a lower coefficient than your proposed contract coefficient, but not higher.

This is one of three pricing questions that are required for consideration for award on this solicitation. Please consider your answer carefully. An explanation of the TIPS scoring of pricing titled "Pricing Coefficient Instruction" is included in the attachments for your information.

The below is an EXAMPLE of how the pricing model works (It is not intended to influence your proposed coefficient, you should propose a coefficient that you determine is reasonable for your business for the life of the contract): The most common after hours coefficient is time and a half of the RS Means Unit Price Book prices. To illustrate this coefficient, if your regular hours coefficient is .95, your after hours coefficient would be 1.45.

1.5

41

REQUIRED FOR 2 PART JOC - PRICING for Markup of Non-Prepriced Items in RS Means Unit Price Book

What is your proposed Markup Percentage on materials not found in the RS Means Price Book? (FAILURE TO RESPOND PROHIBITS PART 2 JOC EVALUATION)

If any materials being utilized for a project cannot be found in the RS Means Price Book, this question is what is the markup percentage on those materials?

When answering this question please insert the number that represents your percentage of proposed markup. Example: if you are proposing a 30 percent markup, please insert the number "30".

Remember that this is a ceiling markup. You may markup a lesser percentage to the TIPS Member customer when pricing the project, but not a greater percentage.

EXAMPLE: You need special materials that are not in the RS Means Unit Price Book for a project. You would buy the materials and mark them up to the TIPS Member customer by the percentage you propose in this question. If the materials cost you, the contractor, $100 and you proposed a markup on this question for the material of 30 percent, then you would charge the TIPS Member customer $130 for the materials.

30%

42

Yes - No

Vendor agrees to remit to TIPS the required administration fee or, if resellers are named, guarantee the fee remittance by or for the reseller named by the vendor?

TIPS/ESC Region 8 is required by Texas Government Code § 791 to be compensated for its work and thus, failure to agree shall render your response void and it will not be considered.

Agreed

43

Yes - No

Do you offer additional discounts to TIPS members for large order quantities or large scope of work?

No

44

Years experience in this category of goods or services.

Company years experience in this category of goods or services?

30

45

Resellers:

Does the vendor have resellers that it will name under this contract?

Resellers are defined as other companies that sell your products under an agreement with you, as the awarded vendor of TIPS.

EXAMPLE: BIGmart is a reseller of ACME brand televisions. If ACME were a TIPS awarded vendor, then ACME would list BIGmart as a reseller.

(If applicable, Vendor should add all Authorized Resellers within the TIPS Vendor Portal upon award).

No

46

Right of Refusal

Does the proposing vendor wish to reserve the right not to perform under the awarded agreement with a TIPS member at vendor's discretion?

Yes

47

NON-COLLUSIVE BIDDING CERTIFICATE

By submission of this bid or proposal, the Bidder certifies that:

1) This bid or proposal has been independently arrived at without collusion with any other Bidder or with any Competitor;

2) This bid or proposal has not been knowingly disclosed and will not be knowingly disclosed, prior to the opening of bids, or proposals for this project, to any other Bidder, Competitor or potential competitor:

3) No attempt has been or will be made to induce any other person, partnership or corporation to submit or not to submit a bid or proposal;

4) The person signing this bid or proposal certifies that he has fully informed himself regarding the accuracy of the statements contained in this certification, and under the penalties being applicable to the Bidder as well as to the person signing in its behalf.

Not a negotiable term. Failure to agree will render your proposal non-responsive and it will not be considered.

48

CONFLICT OF INTEREST QUESTIONNAIRE - FORM CIQ -Do you have any CONFLICT OF INTEREST TO REPORT OR DISCLOSE under this statutory requirement?

Do you have any CONFLICT OF INTEREST TO REPORT OR DISCLOSE under this statutory requirement? YES or NO

If you have a conflict of interest as described in this form or the Local Government Code Chapter 176, cited therein- you are required to complete and file with TIPS.
The Form CIQ is one of the attachments to this solicitation.

There is an optional upload for this form provided if you have a conflict and must file the form

No

49

Filing of Form CIQ

If yes (above), have you filed a form CIQ by uploading the form to this RFP as directed above?

No response

50

Regulatory Standing

I certify to TIPS for the proposal attached that my company is in good standing with all governmental agencies Federal or state that regulate any part of our business operations. If not, please explain in the next attribute question.

Yes

51

Regulatory Standing

Regulatory Standing explanation of no answer on previous question.

n/a

52	**Antitrust Certification Statements (Tex. Government Code § 2155.005)** By submission of this bid or proposal, the Bidder certifies that: I affirm under penalty of perjury of the laws of the State of Texas that: (1) I am duly authorized to execute this contract on my own behalf or on behalf of the company, corporation, firm, partnership or individual (Company) listed below; (2) In connection with this bid, neither I nor any representative of the Company has violated any provision of the Texas Free Enterprise and Antitrust Act, Tex. Bus. & Comm. Code Chapter 15; (3) In connection with this bid, neither I nor any representative of the Company has violated any federal antitrust law; (4) Neither I nor any representative of the Company has directly or indirectly communicated any of the contents of this bid to a competitor of the Company or any other company, corporation, firm, partnership or individual engaged in the same line of business as the Company.

53	**Suspension or Debarment Instructions** Instructions for Certification: 1. By answering yes to the next Attribute question below, the vendor and prospective lower tier participant is providing the certification set out herein in accordance with these instructions. 2. The certification in this clause is a material representation of fact upon which reliance was placed when this transaction was entered into. If it is later determined that the prospective lower tier participant knowingly rendered an erroneous certification in addition to other remedies available to the federal government, the department or agency with which this transaction originated may pursue available remedies, including suspension and / or debarment. 3. The prospective lower tier participant shall provide immediate written notice to the person to which this proposal is submitted if at any time the prospective lower tier participant learns that its certification was erroneous when submitted or has become erroneous by reason of changed circumstances. 4. The terms “covered transaction,” “debarred,” “suspended,” “ineligible,” “lower tier covered transaction,” “participants,” “person,” “primary covered transaction,” “principal,” “proposal” and “voluntarily excluded,” as used in this clause, have the meanings set out in the Definitions and Coverage sections of rules implementing Executive Order 12549. You may contact the person to which this proposal is submitted for assistance in obtaining a copy of those regulations. 5. The prospective lower tier participant agrees by submitting this form that, should the proposed covered transaction be entered into, it shall not knowingly enter into any lower tier covered transaction with a person who is debarred, suspended, declared ineligible or voluntarily excluded from participation in this covered transaction, unless authorized by the department or agency with which this transaction originated. 6. The prospective lower tier participant further agrees by submitting this form that it will include this clause titled “Certification Regarding Debarment, Suspension, Ineligibility and Voluntary Exclusion-Lower Tier Covered Transaction” without modification in all lower tier covered transactions and in all solicitations for lower tier covered transactions. 7. A participant in a covered transaction may rely upon a certification of a prospective participant in a lower tier covered transaction that it is not debarred, suspended, ineligible or voluntarily excluded from the covered transaction, unless it knows that the certification is erroneous. A participant may decide the method and frequency by which it determines the eligibility of its principals. Each participant may, but is not required to, check the Nonprocurement List. 8. Nothing contained in the foregoing shall be construed to require establishment of a system of records in order to render in good faith the certification required by this clause. The knowledge and information of a participant is not required to exceed that which is normally possessed by a prudent person in the ordinary course of business dealings. 9. Except for transactions authorized under paragraph 5 of these instructions, if a participant in a covered transaction knowingly enters into a lower tier covered transaction with a person who is suspended, debarred, ineligible or voluntarily excluded from participation in this transaction, in addition to other remedies available to the federal government, the department or agency with which this transaction originated may pursue available remedies, including suspension and / or debarment.

54

Suspension or Debarment Certification

By answering yes, you certify that no federal suspension or debarment is in place, which would preclude receiving a federally funded contract as described above.

Debarment and Suspension (Executive Orders 12549 and 12689)—A contract award (see 2 CFR 180.220) must not be made to parties listed on the government-wide exclusions in the System for Award Management (SAM), in accordance with the OMB guidelines at 2 CFR 180 that implement Executive Orders 12549 (3 CFR part 1986 Comp., p. 189) and 12689 (3 CFR part 1989 Comp., p. 235), "Debarment and Suspension." SAM Exclusions contains the names of parties debarred, suspended, or otherwise excluded by agencies, as well as parties declared ineligible under statutory or regulatory authority other than Executive Order 12549.

By answering yes, you certify that no federal suspension or debarment is in place, which would preclude receiving a federally funded contract as described above.

Yes

55

Non-Discrimination Statement and Certification

In accordance with Federal civil rights law, all U.S. Departments, including the U.S. Department of Agriculture (USDA) civil rights regulations and policies, the USDA, its Agencies, offices, and employees, and institutions participating in or administering USDA programs are prohibited from discriminating based on race, color, national origin, religion, sex, gender identity (including gender expression), sexual orientation, disability, age, marital status, family/parental status, income derived from a public assistance program, political beliefs, or reprisal or retaliation for prior civil rights activity, in any program or activity conducted or funded by USDA (not all bases apply to all programs). Remedies and complaint filing deadlines vary by program or incident.

Persons with disabilities who require alternative means of communication for program information (e.g., Braille, large print, audiotape, American Sign Language, etc.) should contact the responsible Agency or USDA's TARGET Center at (202) 720-2600 (voice and TTY) or contact USDA through the Federal Relay Service at (800) 877-8339. Additionally, program information may be made available in languages other than English.

To file a program discrimination complaint, complete the USDA Program Discrimination Complaint Form, AD-3027, found online at How to File a Program Discrimination Complaint and at any USDA office or write a letter addressed to USDA and provide in the letter all of the information requested in the form. To request a copy of the complaint form, call (866) 632-9992. Submit your completed form or letter to USDA by: (1) mail: U.S. Department of Agriculture, Office of the Assistant Secretary for Civil Rights, 1400 Independence Avenue, SW, Washington, D.C. 20250-9410; (2) fax: (202) 690-7442; or (3)
email: program.intake@usda.gov.

(Title VI of the Education Amendments of 1972; Section 504 of the Rehabilitation Act of 1973; the Age Discrimination Act of 1975; Title 7 CFR Parts 15, 15a, and 15b; the Americans with Disabilities Act; and FNS Instruction 113-1, Civil Rights Compliance and Enforcement – Nutrition Programs and Activities)

All U.S. Departments, including the USDA are equal opportunity provider, employer, and lender.

Not a negotiable term. Failure to agree will render your proposal non-responsive and it will not be considered. I certify that in the performance of a contract with TIPS or its members, that our company will conform to the foregoing anti-discrimination statement and comply with the cited and all other applicable laws and regulations.

☑ Yes, I certify (Yes)

56

2 CFR PART 200 Contract Provisions Explanation

Required Federal contract provisions of Federal Regulations for Contracts for contracts with ESC Region 8 and TIPS Members:

The following provisions are required to be in place and agreed if the procurement is funded in any part with federal funds.

The ESC Region 8 and TIPS Members are the subgrantee or Subrecipient by definition. Most of the provisions are located in 2 CFR PART 200 - Appendix II to Part 200—Contract Provisions for Non-Federal Entity Contracts Under Federal Awards at 2 CFR PART 200. Others are included within 2 CFR part 200 et al.

In addition to other provisions required by the Federal agency or non-Federal entity, all contracts made by the non-Federal entity under the Federal award must contain provisions covering the following, as applicable.

57

2 CFR PART 200 Contracts

Contracts for more than the simplified acquisition threshold currently set at $250,000, which is the inflation adjusted amount determined by the Civilian Agency Acquisition Council and the Defense Acquisition Regulations Council (Councils) as authorized by 41 U.S.C. 1908, must address administrative, contractual, or legal remedies in instances where contractors violate or breach contract terms, and provide for such sanctions and penalties as appropriate.

Notice: Pursuant to the above, when federal funds are expended by ESC Region 8 and TIPS Members, ESC Region 8 and TIPS Members reserves all rights and privileges under the applicable laws and regulations with respect to this procurement in the event of breach of contract by either party.

Does vendor agree?

Yes

58

2 CFR PART 200 Termination

Termination for cause and for convenience by the grantee or subgrantee including the manner by which it will be effected and the basis for settlement. (All contracts in excess of $10,000)

Pursuant to the above, when federal funds are expended by ESC Region 8 and TIPS Members, ESC Region 8 and TIPS Members reserves the right to terminate any agreement in excess of $10,000 resulting from this procurement process for cause after giving the vendor an appropriate opportunity and up to 30 days, to cure the causal breach of terms and conditions. ESC Region 8 and TIPS Members reserves the right to terminate any agreement in excess of $10,000 resulting from this procurement process for convenience with 30 days notice in writing to the awarded vendor. The vendor would be compensated for work performed and goods procured as of the termination date if for convenience of the ESC Region 8 and TIPS Members. Any award under this procurement process is not exclusive and the ESC Region 8 and TIPS reserves the right to purchase goods and services from other vendors when it is in the best interest of the ESC Region 8 and TIPS.

Does vendor agree?

Yes

59	**2 CFR PART 200 Clean Air Act** Clean Air Act (42 U.S.C. 7401-7671q.) and the Federal Water Pollution Control Act (33 U.S.C. 1251-1387), as amended—Contracts and subgrants of amounts in excess of $250,000 must contain a provision that requires the non-Federal award to agree to comply with all applicable standards, orders or regulations issued pursuant to the Clean Air Act (42 U.S.C. 7401-7671q) and the Federal Water Pollution Control Act as amended (33 U.S.C. 1251-1387). Violations must be reported to the Federal awarding agency and the Regional Office of the Environmental Protection Agency (EPA). Pursuant to the Clean Air Act, et al above, when federal funds are expended by ESC Region 8 and TIPS Members, ESC Region 8 and TIPS Members requires that the proposer certify that during the term of an award by the ESC Region 8 and TIPS Members resulting from this procurement process the vendor agrees to comply with all of the above regulations, including all of the terms listed and referenced therein. Does vendor agree? Yes
60	**2 CFR PART 200 Byrd Anti-Lobbying Amendment** Byrd Anti-Lobbying Amendment (31 U.S.C. 1352)—Contractors that apply or bid for an award exceeding $100,000 must file the required certification. Each tier certifies to the tier above that it will not and has not used Federal appropriated funds to pay any person or organization for influencing or attempting to influence an officer or employee of any agency, a member of Congress, officer or employee of Congress, or an employee of a member of Congress in connection with obtaining any Federal contract, grant or any other award covered by 31 U.S.C. 1352. Each tier must also disclose any lobbying with non-Federal funds that takes place in connection with obtaining any Federal award. Such disclosures are forwarded from tier to tier up to the non-Federal award. Pursuant to the above, when federal funds are expended by ESC Region 8 and TIPS Members, ESC Region 8 and TIPS Members requires the proposer certify that during the term and during the life of any contract with ESC Region 8 and TIPS Members resulting from this procurement process the vendor certifies to the terms included or referenced herein. Does vendor agree? Yes
61	**2 CFR PART 200 Federal Rule** Compliance with all applicable standards, orders, or requirements issued under section 306 of the Clean Air Act (42 U.S.C. 1857(h)), section 508 of the Clean Water Act (33 U.S.C. 1368), Executive Order 11738, and Environmental Protection Agency regulations (40 CFR part 15). (Contracts, subcontracts, and subgrants of amounts in excess of $250,000) Pursuant to the above, when federal funds are expended by ESC Region 8 and TIPS Members, ESC Region 8 and TIPS Members requires the proposer certify that in performance of the contracts, subcontracts, and subgrants of amounts in excess of $250,000, the vendor will be in compliance with all applicable standards, orders, or requirements issued under section 306 of the Clean Air Act (42 U.S.C. 1857(h)), section 508 of the Clean Water Act (33 U.S.C. 1368), Executive Order 11738, and Environmental Protection Agency regulations (40 CFR part 15). Does vendor certify that it is in compliance with the Clean Air Act? Yes

62	**2 CFR PART 200 Procurement of Recovered Materials** A non-Federal entity that is a state agency or agency of a political subdivision of a state and its contractors must comply with section 6002 of the Solid Waste Disposal Act, as amended by the Resource Conservation and Recovery Act. The requirements of Section 6002 include procuring only items designated in guidelines of the Environmental Protection Agency (EPA) at 40 CFR part 247 that contain the highest percentage of recovered materials practicable, consistent with maintaining a satisfactory level of competition, where the purchase price of the item exceeds $10,000 or the value of the quantity acquired during the preceding fiscal year exceeded $10,000; procuring solid waste management services in a manner that maximizes energy and resource recovery; and establishing an affirmative procurement program for procurement of recovered materials identified in the EPA guidelines. Does vendor certify that it is in compliance with the Solid Waste Disposal Act as described above? Yes
63	**2 CFR PART 200 Rights to Inventions** If the Federal award meets the definition of “funding agreement” under 37 CFR §401.2 (a) and the recipient or subrecipient wishes to enter into a contract with a small business firm or nonprofit organization regarding the substitution of parties, assignment or performance of experimental, developmental, or research work under that “funding agreement,” the recipient or subrecipient must comply with the requirements of 37 CFR Part 401, “Rights to Inventions Made by Nonprofit Organizations and Small Business Firms Under Government Grants, Contracts and Cooperative Agreements,” and any implementing regulations issued by the awarding agency. Pursuant to the above, when the foregoing applies to ESC Region 8 and TIPS Members, Vendor certifies that during the term of an award resulting from this procurement process, Vendor agrees to comply with all applicable requirements as referenced in the Federal rule above. Does vendor agree? Yes
64	**2 CFR PART 200 Domestic Preferences for Procurements** As appropriate and to the extent consistent with law, the non-Federal entity should, to the greatest extent practicable under a Federal award, provide a preference for the purchase, acquisition, or use of goods, products, or materials produced in the United States (including but not limited to iron, aluminum, steel, cement, and other manufactured products). The requirements of this section must be included in all subawards including all contracts and purchase orders for work or products under this award. For purposes of 2 CFR Part 200.322, “Produced in the United States” means, for iron and steel products, that all manufacturing processes, from the initial melting stag through the application of coatings, occurred in the United States. Moreover, for purposes of 2 CFR Part 200.322, “Manufactured products” means items and construction materials composed in whole or in part of non-ferrous metals such as aluminum, plastics and polymer-based products such as polyvinyl chloride pipe, aggregates such as concrete, class, including optical fiber, and lumber. Pursuant to the above, when federal funds are expended by ESC Region 8 and TIPS Members, Vendor certifies that to the greatest extent practicable Vendor will provide a preference for the purchase, acquisition, or use of goods, products, or materials produced in the United States (including but not limited to iron, aluminum, steel, cement, and other manufactured products). Does vendor agree? Yes

65	**2 CFR PART 200 Ban on Foreign Telecommunications** Federal grant funds may not be used to purchase equipment, services, or systems that use “covered telecommunications” equipment or services as a substantial or essential component of any system, or as critical technology as part of any system. “Covered telecommunications” means purchases from Huawei Technologies Company or ZTE Corporation (or any subsidiary or affiliate of such entities), and video surveillance and telecommunications equipment produced by Hytera Communications Corporation, Hangzhou Hikvision Digital Technology Company, or Dahua Technology Company (or any subsidiary or affiliate of such entities). Pursuant to the above, when federal funds are expended by ESC Region 8 and TIPS Members, Vendor certifies that Vendor will not purchase equipment, services, or systems that use “covered telecommunications”, as defined by 2 CFR §200.216 equipment or services as a substantial or essential component of any system, or as critical technology as part of any system. Does vendor agree? Yes

66	**2 CFR PART 200 Equal Employment Opportunity** Except as otherwise provided under 41 CFR Part 60, all contracts that meet the definition of “federally assisted construction contract” in 41 CFR Part 60-1.3 must include the equal opportunity clause provided under 41 CFR 60-1.4(b), in accordance with Executive Order 11246, “Equal Employment Opportunity” (30 FR 12319, 12935, 3 CFR Part, 1964-1965 Comp., p. 339), as amended by Executive Order 11375, “Amending Executive Order 11246 Relating to Equal Employment Opportunity,” and implementing regulations at 41 CFR part 60, “Office of Federal Contract Compliance Programs, Equal Employment Opportunity, Department of Labor.” Pursuant to the above, when federal funds are expended by ESC Region 8 and TIPS Members on any federally assisted construction contract, the equal opportunity clause is incorporated by reference herein. Does vendor agree? Yes

67	**2 CFR PART 200 Contract Work Hours and Safety Standards Act (40 U.S.C. 3701-3708)** [*Applicable ONLY to contracts in excess of $100,000 involving mechanics or laborers*.] Contract Work Hours and Safety Standards Act (40 U.S.C. 3701-3708). Where applicable, all contracts awarded by the non-Federal entity in excess of $100,000 that involve the employment of mechanics or laborers must include a provision for compliance with 40 U.S.C. 3702 and 3704, as supplemented by Department of Labor regulations (29 CFR Part 5). Under 40 U.S.C. 3702 of the Act, each contractor must be required to compute the wages of every mechanic and laborer on the basis of a standard work week of 40 hours. Work in excess of the standard work week is permissible provided that the worker is compensated at a rate of not less than one and a half times the basic rate of pay for all hours worked in excess of 40 hours in the work week. The requirements of 40 U.S.C. 3704 are applicable to construction work and provide that no laborer or mechanic must be required to work in surroundings or under working conditions which are unsanitary, hazardous or dangerous. These requirements do not apply to the purchases of supplies or materials or articles ordinarily available on the open market, or contracts for transportation or transmission of intelligence. Pursuant to the above, when federal funds are expended by ESC Region 8 and TIPS Members on qualifying contracts, Vendor certifies that Vendor will be in compliance with all applicable provisions of the Contract Work Hours and Safety Standards Act during the term of an award for all contracts by the District resulting from this procurement process. Does vendor agree? Yes

68	**Certification Regarding Lobbying** Applicable to Grants, Subgrants, Cooperative Agreements, and Contracts Exceeding $100,000 in Federal Funds Submission of this certification is a prerequisite for making or entering into this transaction and is imposed by section 1352, Title 31, U.S. Code. This certification is a material representation of fact upon which reliance was placed when this transaction was made or entered into. Any person who fails to file the required certification shall be subject to a civil penalty of not less than $10,000 and not more than $100,000 for each such failure. The undersigned certifies, to the best of his or her knowledge and belief, that: (1) No Federal appropriated funds have been paid or will be paid by or on behalf of the undersigned, to any person for influencing or attempting to influence an officer or employee of any agency, a Member of Congress, an officer or employee of congress, or an employee of a Member of Congress in connection with the awarding of a Federal contract, the making of a Federal grant, the making of a Federal loan, the entering into a cooperative agreement, and the extension, continuation, renewal, amendment, or modification of a Federal contract, grant, loan, or cooperative agreement. (2) If any funds other than Federal appropriated funds have been paid or will be paid to any person for influencing or attempting to influence an officer or employee of any agency, a Member of Congress, an officer or employee of congress, or an employee of a Member of Congress in connection with this Federal grant or cooperative agreement, the undersigned shall complete and submit Standard Form-LLL, “disclosure Form to Report Lobbying,” in accordance with its instructions. (3) The undersigned shall require that the language of this certification be included in the award documents for all covered subawards exceeding $100,000 in Federal funds at all appropriate tiers and that all subrecipients shall certify and disclose accordingly. I HAVE NOT Lobbied per above

69	**Lobbying Report Standard Form-LLL, “disclosure Form to Report Lobbying,”** ONLY IF you answered "I HAVE Lobbied per above" to attribute above titled "**Certification Regarding Lobbying**", please download and complete and upload the Standard Form-LLL, “disclosure Form to Report Lobbying,” in the Response attachments section.

70	**Subcontracting with small and minority businesses, women's business enterprises, and labor surplus area firms.** Do you ever anticipate the possibility of subcontracting any of your work under this award if you are successful? IF NO, DO NOT ANSWER THE NEXT ATTRIBUTE QUESTION. . IF YES, and ONLY IF YES, you must answer the next question YES if you want a TIPS Member to be authorized to spend Federal Grant Funds for Procurement. NO

71	**ONLY IF YES TO THE PREVIOUS QUESTION OR if you ever do subcontract any part of your performance under the TIPS Agreement, do you agree to comply with the following federal requirements?** ONLY IF YES TO THE ABOVE QUESTIONS OR if you ever do subcontract any part of your performance under the TIPS Agreement, do you agree to comply with the following federal requirements? Federal Regulation 2 CFR §200.321 Contracting with small and minority businesses, women's business enterprises, and labor surplus area firms. (a)The non-Federal entity must take all necessary affirmative steps to assure that minority businesses, women's business enterprises, and labor surplus area firms are used when possible. (b) Affirmative steps must include:(1) Placing qualified small and minority businesses and women's business enterprises on solicitation lists; (2) Assuring that small and minority businesses, and women's business enterprises are solicited whenever they are potential sources; (3) Dividing total requirements, when economically feasible, into smaller tasks or quantities to permit maximum participation by small and minority businesses, and women's business enterprises; (4) Establishing delivery schedules, where the requirement permits, which encourage participation by small and minority businesses, and women's business enterprises; (5) Using the services and assistance, as appropriate, of such organizations as the Small Business Administration and the Minority Business Development Agency of the Department of Commerce ; and (6) Requiring the prime contractor, if subcontracts are to be let, to take the affirmative steps listed in paragraphs(1) through (5) of this section. *No response*

72	**If proposing on PART 2, Davis-Bacon Act compliance.** IF proposing on PART 2, Texas Statute requires compliance with Davis-Bacon Act, as amended (40 U.S.C. 3141-3148). When required by Federal program legislation, all prime construction contracts in excess of $2,000 awarded by non-Federal entities must include a provision for compliance with the Davis-Bacon Act (40 U.S.C. 3141-3144, and 3146-3148) as supplemented by Department of Labor regulations (29 CFR Part S, "Labor Standards Provisions Applicable to Contracts Covering Federally Financed and Assisted Construction"). In accordance with the statute, contractors must be required to pay wages to laborers and mechanics at a rate not less than the prevailing wages specified in a wage determination made by the Secretary of Labor. In addition, contractors must be required to pay wages not less than once a week. The non-Federal entity must place a copy of the current prevailing wage determination issued by the Department of Labor in each solicitation. The decision to award a contract or subcontract must be conditioned upon the acceptance of the wage determination. The non-Federal entity must report all suspected or reported violations to the Federal awarding agency. The contracts must also include a provision for compliance with the Copeland "Anti-Kickback" Act {40 U.S.C. 314S), as supplemented by Department of Labor regulations (29 CFR Part 3, "Contractors and Subcontractors on Public Building or Public Work Financed in Whole or in Part by Loans or Grants from the United States"). The Act provides that each contractor or subrecipient must be prohibited from inducing, by any means, any person employed in the construction, completion, or repair of public work, to give up any part of the compensation to which he or she is otherwise entitled. The non-Federal entity must report all suspected or reported violations to the Federal awarding agency. BY SUBMITTING A PROPOSAL FOR PART 2 OF THIS SOLICITATION, the Vendor agrees, AS REQUIRED BY LAW, to comply with the Davis Bacon Act, IF APPLICABLE and if proposing on PART 2 of this solicitation.

73

Contract Work Hours and Safety Standards Act (40 U.S.C. 3701-3708)

Where applicable, all contracts awarded by the non-Federal entity in excess of $100,000 that involve the employment of mechanics or laborers must include a provision for compliance with 40 U.S.C. 3702 and 3704, as supplemented by Department of Labor regulations (29 CFR Part 5). Under 40 U.S.C. 3702 of the Act, each contractor must be required to compute the wages of every mechanic and laborer on the basis of a standard work week of 40 hours. Work in excess of the standard work week is permissible provided that the worker is compensated at a rate of not less than one and a half times the basic rate of pay for all hours worked in excess of 40 hours in the work week. The requirements of 40 U.S.C. 3704 are applicable to construction work and provide that no laborer or mechanic must be required to work in surroundings or under working conditions which are unsanitary, hazardous or dangerous. These requirements do not apply to the purchases of supplies or materials or articles ordinarily available on the open market, or contracts for transportation or transmission of intelligence.

By submitting a proposal to PART 2 of this solicitation and IF the customer is utilizing federal funds as described above, the Vendor agrees to comply with the Contract Work Hours and Safety Standards Act (40 U.S.C. 3701-3708).

74

Indemnification

The ESC Region 8 and TIPS is a Texas Political Subdivision and a local governmental entity; therefore, is prohibited from indemnifying third parties pursuant to the Texas Constitution (Article 3, Section 52) except as specifically provided by law or as ordered by a court of competent jurisdiction. A provision in a contract to indemnify or hold a party harmless is a promise to pay for any expenses the indemnified party incurs, if a specified event occurs, such as breaching the terms of the contract or negligently performing duties under the contract. Article III, Section 49 of the Texas Constitution states that "no debt shall be created by or on behalf of the State ... " The Attorney General has counseled that a contractually imposed obligation of indemnity creates a "debt" in the constitutional sense. Tex. Att'y Gen. Op. No. MW-475 (1982). Contract clauses which require the System or institutions to indemnify must be deleted or qualified with "to the extent permitted by the Constitution and Laws of the State of Texas." Liquidated damages, attorney's fees, waiver of vendor's liability, and waiver of statutes of limitations clauses should also be deleted or qualified with "to the extent permitted by the Constitution and laws of State of Texas."

Do you agree to these terms?

☑ Yes, I Agree (Yes)

75

Remedies

The parties shall be entitled to exercise any right or remedy available to it either at law or in equity, subject to the choice of law, venue and service of process clauses limitations agreed herein. Nothing in this agreement shall commit the TIPS to an arbitration resolution of any disagreement under any circumstances. Any Claim arising out of or related to the Contract, except for those specifically waived under the terms of the Contract, may, after denial of the Board of Directors, be subject to mediation at the request of either party. Any issues not resolved hereunder MAY be referred to non-binding mediation to be conducted by a mutually agreed upon mediator as a prerequisite to the filing of any lawsuit over such issue(s). The parties shall share the mediator’s fee and any associated filing fee equally. Mediation shall be held in Camp or Titus County, Texas. Agreements reached in mediation shall be reduced to writing, and will be subject to the approval by the District's Board of Directors, signed by the Parties if approved by the Board of Directors, and, if signed, shall thereafter be enforceable as provided by the laws of the State of Texas.

Do you agree to these terms?

Yes, I Agree

76

Remedies Explanation of No Answer

n/a

77

Choice of Law

The agreement between the Vendor and TIPS/ESC Region 8 and any addenda or other additions resulting from this procurement process, however described, shall be governed by, construed and enforced in accordance with the laws of the State of Texas, regardless of any conflict of laws principles.
THIS DOES NOT APPLY to a vendor's agreement entered into with a TIPS Member, as the Member may be located outside Texas.

Do you agree to these terms?

Agreed

78

Venue, Jurisdiction and Service of Process

Any proceeding, involving Region 8 ESC or TIPS, arising out of or relating to this procurement process or any contract issued by TIPS resulting from or any contemplated transaction shall be brought in a court of competent jurisdiction in Camp County, Texas and each of the parties irrevocably submits to the exclusive jurisdiction of said court in any such proceeding, waives any objection it may now or hereafter have to venue or to convenience of forum, agrees that all claims in respect of the Proceeding shall be heard and determined only in any such court, and agrees not to bring any proceeding arising out of or relating to this procurement process or any contract resulting from or any contemplated transaction in any other court. The parties agree that either or both of them may file a copy of this paragraph with any court as written evidence of the knowing, voluntary and freely bargained for agreement between the parties irrevocably to waive any objections to venue or to convenience of forum. Process in any Proceeding referred to in the first sentence of this Section may be served on any party anywhere in the world. Any dispute resolution process other than litigation shall have venue in Camp County or Titus County Texas.

Do you agree to these terms?

Agreed

79

Alternative Dispute Resolution Explanation of No Answer

n/a

80

Infringement(s)

The successful vendor will be expected to indemnify and hold harmless the TIPS and its employees, officers, agents, representatives, contractors, assignees and designees from any and all third party claims and judgments involving infringement of patent, copyright, trade secrets, trade or service marks, and any other intellectual or intangible property rights attributed to or claims based on the Vendor's proposal or Vendor’s performance of contracts awarded and approved.

Do you agree to these terms?

Yes, I Agree

81

Infringement(s) Explanation of No Answer

n/a

82

Acts or Omissions

The successful vendor will be expected to indemnify and hold harmless the TIPS, its officers, employees, agents, representatives, contractors, assignees and designees from and against any and all liability, actions, claims, demands or suits, and all related costs, attorney's fees and expenses arising out of, or resulting from any acts or omissions of the vendor or its agents, employees, subcontractors, or suppliers in the execution or performance of any agreements
ultimately made by TIPS and the vendor.

Do you agree to these terms?

Yes, I Agree

83	**Acts or Omissions Explanation of No Answer** n/a
84	**Contract Governance** Any contract made or entered into by the TIPS is subject to and is to be governed by Section 271.151 et seq, Tex Loc Gov't Code. Otherwise, TIPS does not waive its governmental immunities from suit or liability except to the extent expressly waived by other applicable laws in clear and unambiguous language. ☑ Yes, I Agree (Yes)
85	**Payment Terms and Funding Out Clause** Payment Terms: TIPS or TIPS members shall not be liable for interest or late payment fees on past due balances at a rate higher than permitted by the laws or regulations of the jurisdiction of the TIPS Member. Funding Out Clause: Vendor agrees to abide by the laws and regulations, including Texas Local Government Code § 271.903, or any statutory or regulatory limitations of the jurisdiction of any TIPS Member which governs contracts entered into by the Vendor and TIPS or a TIPS Member that requires all contracts approved by TIPS or a TIPS Member are subject to the budgeting and appropriation of currently available funds by the entity or its governing body. See statute(s) for specifics or consult your legal counsel. Not a negotiable term. Failure to agree will render your proposal non-responsive and it will not be considered. Do you agree to these terms? ☑ Yes, I Agree (Yes)

86	**Insurance and Fingerprint Requirements Information** Insurance If applicable and your staff will be on TIPS member premises for delivery, training or installation etc. and/or with an automobile, you must carry automobile insurance as required by law. You may be asked to provide proof of insurance. Fingerprint It is possible that a vendor may be subject to Chapter 22 of the Texas Education Code. The Texas Education Code, Chapter 22, Section 22.0834 & 22.08341. Statutory language may be found at: http://www.statutes.legis.state.tx.us/ If the vendor has staff that meet both of these criterion: (1) will have continuing duties related to the contracted services; and (2) has or will have direct contact with students Then you have ”covered” employees for purposes of completing the attached form. TIPS recommends all vendors consult their legal counsel for guidance in compliance with this law. If you have questions on how to comply, see below. If you have questions on compliance with this code section, contact the Texas Department of Public Safety Non-Criminal Justice Unit, Access and Dissemination Bureau, FAST-FACT at NCJU@txdps.state.tx.us and you should send an email identifying you as a contractor to a Texas Independent School District or ESC Region 8 and TIPS. Texas DPS phone number is (512) 424-2474. See form in the next attribute to complete entitled: Texas Education Code Chapter 22 Contractor Certification for Contractor Employees

87

Texas Education Code Chapter 22 Contractor Certification for Contractor Employees

Introduction: Texas Education Code Chapter 22 requires entities that contract with school districts to provide services to obtain criminal history record information regarding covered employees. Contractors must certify to the district that they have complied. Covered employees with disqualifying criminal histories are prohibited from serving at a school district.

Definitions: Covered employees: Employees of a contractor or subcontractor who have or will have continuing duties related to the service to be performed at the District and have or will have direct contact with students. The District will be the final arbiter of what constitutes direct contact with students. Disqualifying criminal history: Any conviction or other criminal history information designated by the District, or one of the following offenses, if at the time of the offense, the victim was under 18 or enrolled in a public school:

(a) a felony offense under Title 5, Texas Penal Code; (b) an offense for which a defendant is required to register as a sex offender under Chapter 62, Texas Code of Criminal Procedure; or (c) an equivalent offense under federal law or the laws of another state.

I certify that:

NONE (Section A) of the employees of Contractor and any subcontractors are covered employees, as defined above. If this box is checked, I further certify that Contractor has taken precautions or imposed conditions to ensure that the employees of Contractor and any subcontractor will not become covered employees. Contractor will maintain these precautions or conditions throughout the time the contracted services are provided.

OR

SOME (Section B) or all of the employees of Contractor and any subcontractor are covered employees. If this box is checked, I further certify that:

(1) Contractor has obtained all required criminal history record information regarding its covered employees. None of the covered employees has a disqualifying criminal history.

(2) If Contractor receives information that a covered employee subsequently has a reported criminal history, Contractor will immediately remove the covered employee from contract duties and notify the District in writing within 3 business days.

(3) Upon request, Contractor will provide the District with the name and any other requested information of covered employees so that the District may obtain criminal history record information on the covered employees.

(4) If the District objects to the assignment of a covered employee on the basis of the covered employee's criminal history record information, Contractor agrees to discontinue using that covered employee to provide services at the District.

Noncompliance or misrepresentation regarding this certification may be grounds for contract termination.

None

88	**Texas Business and Commerce Code § 272 Requirements as of 9-1-2017** SB 807 prohibits construction contracts to have provisions requiring the contract to be subject to the laws of another state, to be required to litigate the contract in another state, or to require arbitration in another state. A contract with such provisions is voidable. Under this new statute, a “construction contract” includes contracts, subcontracts, or agreements with (among others) architects, engineers, contractors, construction managers, equipment lessors, or materials suppliers. “Construction contracts” are for the design, construction, alteration, renovation, remodeling, or repair of any building or improvement to real property, or for furnishing materials or equipment for the project. The term also includes moving, demolition, or excavation. BY RESPONDING TO THIS SOLICITATION, AND WHEN APPLICABLE, THE PROPOSER AGREES TO COMPLY WITH THE TEXAS BUSINESS AND COMMERCE CODE § 272 WHEN EXECUTING CONTRACTS WITH TIPS MEMBERS THAT ARE TEXAS GOVERNMENT ENTITIES.

89	**Texas Government Code 2270 & 2270 Verification Form** Texas Government Code 2270 & 2271 Verification Form If (a) Vendor is not a sole proprietorship; (b) Vendor has ten (10) or more full-time employees; and (c) this Agreement has a value of $100,000 or more, the following certification shall apply; otherwise, this certification is not required. Pursuant to Chapter 2271 of the Texas Government Code, the Vendor hereby certifies and verifies that neither the Vendor, nor any affiliate, subsidiary, or parent company of the Vendor, if any (the "Vendor Companies"), boycotts Israel, and the Vendor agrees that the Vendor and Vendor Companies will not boycott Israel during the term of this Agreement. For purposes of this Agreement, the term "boycott" shall mean and include refusing to deal with, terminating business activities with, or otherwise taking any action that is intended to penalize, inflict economic harm on, or limit commercial relations with Israel, or with a person or entity doing business in Israel or in an Israeli-controlled territory, but does not include an action made for ordinary business purposes. Our entity further certifies that it is is not listed on and we do not do business with companies prohibited by Texas Government Code 2270 or that are on the Texas Comptroller of Public Accounts list of Designated Foreign Terrorists Organizations per Texas Gov't Code 2270.0153 found at https://comptroller.texas.gov/purchasing/docs/foreign-terrorist.pdf I swear and affirm that the above is true and correct. YES

90	**Logos and other company marks** Please upload your company logo to be added to your individual profile page on the TIPS website. If any particular specifications are required for use of your company logo, please upload that information under the "Logo and Other Company Marks" section under the “Response Attachment” tab. Preferred Logo Format: 300 x 225 px - .png, .eps, .jpeg preferred Potential uses of company logo: * Your Vendor Profile Page of TIPS website * Potentially on TIPS website scroll bar for Top Performing Vendors * TIPS Quarterly eNewsletter sent to TIPS Members * Co-branding Flyers and or email blasts to our TIPS Members (Permission and approval will be obtained before publishing)

91

Solicitation Deviation/Compliance

Does the vendor agree with the General Conditions Standard Terms and Conditions or Item Specifications listed in this proposal invitation?

Yes

92

Solicitation Exceptions/Deviations Explanation

If the bidder intends to deviate from the General Conditions Standard Terms and Conditions or Item Specifications listed in this proposal invitation, all such deviations must be listed on this attribute, with complete and detailed conditions and information included or attached.
TIPS will consider any deviations in its proposal award decisions, and TIPS reserves the right to accept or reject any bid based upon any deviations indicated below or in any attachments or inclusions.
In the absence of any deviation entry on this attribute, the proposer assures TIPS of their full compliance with the Standard Terms and Conditions, Item Specifications, and all other information contained in this Solicitation.

n/a

93

Agreement Deviation/Compliance

Does the vendor agree with the language in the Vendor Agreement?

Yes

94

Agreement Exceptions/Deviations Explanation

If the proposing Vendor desires to deviate form the Vendor Agreement language, all such deviations must be listed on this attribute, with complete and detailed conditions and information included. TIPS will consider any deviations in its proposal award decisions, and TIPS reserves the right to accept or reject any proposal based upon any deviations indicated below. In the absence of any deviation entry on this attribute, the proposer assures TIPS of their full compliance with the Vendor Agreement.

n/a

95

Felony Conviction Notice

Texas Education Code, Section 44.034, Notification of Criminal History, Subsection (a), states “a person or business entity that enters into a contract with a school district must give advance notice to the district if the person or an owner or operator of the business entity has been convicted of a felony. The notice must include a general description of the conduct resulting in the conviction of a felony.” Subsection (b) states “a school district may terminate a contract with a person or business entity if the district determines that the person or business entity failed to give notice as required by Subsection (a) or misrepresented the conduct resulting in the conviction. The district must compensate the person or business entity for services performed before the termination of the contract.” (c) This section does not apply to a publicly held corporation. The person completing this proposal certifies that they are authorized to provide the answer to this question.
Select A., B. or C.
A. My firm is a publicly held corporation; therefore, this reporting requirement is not applicable.
OR B.My firm is not owned nor operated by anyone who has been convicted of a felony, OR
C. My firm is owned or operated by the following individual(s) who has/have been convicted of a felony. (if you answer C below, you are required to provide information in the next attribute.

A. Firm is a publicly held corporation.

96 **If you answered C. My Firm is owned or operated by a felon to the previous question, you are REQUIRED TO ANSWER THE FOLLOWING QUESTIONS.**

If you answered C. My Firm is owned or operated by a felon to the previous question, you must provide the following information.

1. Name of Felon(s)

2. The named person's role in the firm, and

3. Details of Conviction(s).

n/a

97 **Required Confidentiality Claim Form**

Required Confidentiality Claim Form
This completed form is required by TIPS. By submitting a response to this solicitation you agree to download from the “Attachments” section, complete according to the instructions on the form, then upload the completed form, with any confidential attachments, if applicable, to the “Response Attachments” section titled “Confidentiality Form” in order to provide to TIPS the completed form titled, “CONFIDENTIALITY CLAIM FORM”. THIS REQUIRED PROCESS IS THE ONLY WAY TO DEEM PROPOSAL DOCUMENTATION CONFIDENTIAL ANY OTHER CONFIDENTIAL DESIGNATION WILL BE DISREGARDED UNLESS THE DOCUMENT IS IDENTIFIED BY AND ATTACHED TO THE REQUIRED FORM. By completing this process, you provide us with the information we require to comply with the open record laws of the State of Texas as they may apply to your proposal submission. If you do not provide the form with your proposal, an award will not be made if your proposal is qualified for an award, until TIPS has an accurate, completed form from you.
Read the form carefully before completing and if you have any questions, email bids@tips-usa.com.

98 **Choice of Law clauses for TIPS Members**

If the vendor is awarded a contract with TIPS under this solicitation, the vendor agrees to make any Choice of Law clauses in any contract or agreement entered into between the awarded vendor and with a TIPS member entity to read as follows: "Choice of law shall be the laws of the state where the customer resides" or words to that effect.

Agreed

99 **Venue of dispute resolution with a TIPS Member**

In the event of litigation or use of any dispute resolution model when resolving disputes with a TIPS member entity as a result of a transaction between the vendor and TIPS or the TIPS member entity, the Venue for any litigation or other agreed upon model shall be in the state and county where the customer resides unless otherwise agreed by the parties at the time the dispute resolution model is decided by the parties.

Agreed

100 **Indemnity Limitation with TIPS Members**

Texas and other states restrict by law or state Constitution the ability of a governmental entity to indemnify others. TIPS requires that any contract entered into between a vendor and TIPS or a TIPS Member as a result of an award under this Solicitation limit the requirement that the Customer indemnify the Vendor by either eliminating any such indemnity requirement clauses in any agreements, contracts or other binding documents **OR** by prefacing all indemnity clauses required of TIPS or the TIPS Member entity with the following: "To the extent permitted by the laws or the Constitution of the state where the customer resides, ".

Agreement is a required condition to award of a contract resulting from this Solicitation.

Agreed

101	**Arbitration Clauses** Except for certain circumstances, TIPS forbids a mandatory arbitration clause in any contract or agreement entered into between the awarded vendor with TIPS or a TIPS member entity. Does the vendor agree to exclude any arbitration requirement in any contracts or agreement entered into between TIPS or a TIPS member entity through an awarded contract with TIPS? **Agreement is a required condition to award of a contract resulting from this Solicitation.** Agreed

102	**Upload of Current W-9 Required** Please note that you are required by TIPS to upload a current W-9 Internal Revenue Service (IRS) Tax Form for your entity. This form will be utilized by TIPS to properly identify your entity.

REFERENCES

ALL INFORMATION MUST BE TYPED AND FORM MUST BE UPLOADED IN EXCEL FORMAT. DO NOT HANDWRITE I

Please provide three (3) references, preferably from school districts or other governmental entities who have used your services within the last three years. Additional references may be required. DO NOT INCLUDE TIPS EMPLOYEES AS A REFERENCE.

References are Required for PART 1 & Part 2. Please verify your references are current and valid, as they are a SIGNIFICANT required evaluation component of the PART 2 evaluation process, and the evaluation cannot be completed without

You may provide more than three (3) references.

Entity Name	Contact Person	**VALID EMAIL IS REQUIRED**	Phone
Boston University	Melinda Zhu	mwzhu@bu.edu	617-358-0549
Boise State University	David Cooper	dcooper@boisestate.edu	208-426-2364
Texas Scenic Company	John Owens	j.owens@texasscenic.com	210-684-0091 ext 2951
Community School District	Kathy Rigger	criggerk@carthage.k12.mo.us	417-359-7020

TIPS RFP # 210703

Required Confidential Information Status Form

Name of company

Trex Commercial Products Inc., dba Staging Concepts

Printed Name and Title of authorized company officer declaring below the confidential status of material

Address	City	State	ZIP	Phone
Laura Rygielski-Preston	Minneapolis	MN	55428	763-553-2094

ALL VENDORS MUST COMPLETE THE ABOVE SECTION

CONFIDENTIAL INFORMATION SUBMITTED IN RESPONSE TO COMPETITIVE PROCUREMENT REQUESTS OF EDUCATION SERVICE CENTER REGION 8 AND TIPS (ESC8) IS GOVERNED BY TEXAS GOVERNMENT CODE, CHAPTER 552

If you consider any portion of your proposal to be confidential information and not subject to public disclosure pursuant to Chapter 552 Texas Gov't Code or other law(s), **you must attach a copy of all claimed confidential materials within your proposal and put this COMPLETED form as a cover sheet to said materials then scan, name "CONFIDENTIAL" and upload with your proposal submission.** (You must include all the confidential information in the submitted proposal. The copy uploaded is to indicate which material in your proposal, if any, you deem confidential in the event the receives a Public Information Request.) ESC8 and TIPS will follow procedures of controlling statute(s) regarding any claim of confidentiality and shall not be liable for any release of information required by law. Upon your claim and your defense to the Office of Texas Attorney General is required to make the final determination whether the information submitted by you and held by ESC8 and TIPS is confidential and exempt from public disclosure.

ALL VENDORS MUST COMPLETE ONE OF THE TWO OPTIONS BELOW.

OPTION 1:

I DO CLAIM parts of my proposal to be confidential and *DO NOT* desire to expressly waive a claim of confidentiality of all information contained within our response to the solicitation. The attached contains material from our proposal that I classify and deem confidential under Texas Gov't Code Sec. 552 or other law(s) and I invoke my statutory rights to confidential treatment of the enclosed materials.

IF CLAIMING PARTS OF YOUR PROPOSAL CONFIDENTIAL, YOU MUST ATTACH THE SHEETS TO THIS FORM AND LIST THE NUMBER OT TOTAL PAGES THAT ARE CONFIDENTIAL.

ATTACHED ARE COPIES OF_____PAGES OF CLAIMED CONFIDENTIAL MATERIAL FROM OUR PROPOSAL THAT WE DEEM TO BE NOT PUBLIC INFORMATION AND WILL DEFEND THAT CLAIM TO THE TEXAS ATTORNEY GENERAL IF REQUESTED WHEN A PUBLIC INFORMATION REQUEST IS MADE FOR OUR PROPOSAL.

Signature_____ Date _____

---------- **OR** ----------

OPTION 2:

I DO NOT CLAIM any of my proposal to be confidential, complete the section below.

Express Waiver: I desire to expressly waive any claim of confidentiality as to any and all information contained within our response to the competitive procurement process (e.g. RFP, CSP, Bid, RFQ, etc.) by completing the following and submitting this sheet with our response to Education Service Center Region 8 and TIPS.

Signature Laura Rygielski Preston Date 8/13/21

CLIMA-CORE™ PLATFORM

The Clima-Core™ Platform is Staging Concepts' weather-resistant platform, specially designed for outdoor use. This single-sided, semi-permanent platform is constructed with the same level of strength and durability as our cornerstone SC90® Platform, with the added benefit of being able to withstand the natural elements of the outdoors, such as hot or cold temperatures. The Clima-Core platform is water resistant and will not rot, swell, warp or absorb moisture. Plus, the construction of this demountable platform is impervious to ants, termites, moths, bugs, and beetles making this platform an ideal candidate for long-term outdoor placement.

The core feature of this durable, all season platform is essentially its core! The honeycomb core's top is weather-resistant making the platform suitable for a wide range of weather conditions and a wide range of events. The Clima-Core is constructed with an extruded aluminum frame that is combined with a sturdy non-wood composite substrate. This all-weather platform includes a load rating of 150 psf., is available in our standard black HDPE, and features a UV resistant surface finish.

Like our other platforms, the Clima-Core is available in both standard and custom sizes. Standard sizes include 4' x 8' (1.22 m x 2.44 m), 4' x 6' (1.22 m x 1.83 m), 4' x 4' (1.22 m x 1.22 m), 3' x 8' (.91 m x 2.44 m), 3' x 6' (.91 m x 1.83 m) and 2' x 8' (.61 m x 2.44 m). The platform is compatible with our SC90 Fixed and Adjustable Leg Supports, our SC9600 Bridge Supports, and our full line of accessories including our skirt clips, chair stops, and closure panels.

Be outdoors and gain more portable staging options with the Clima-Core!

The Clima-Core is designed to withstand the natural elements of the outdoors making it suitable year-round.

Be outdoors with the Clima-Core!

ADVANTAGES

Strength

· Constructed with 1" (25.4 mm) thick non-wood structural composite core that does not rot, mold, mildew or absorb moisture.

· Textured black HDPE surface contains additives to extend the life of the color and plastic in an outdoor environment.

· Engineered to support 150 lbs/square foot of uniformly distributed live load.

· Top locking Roto-Locks provide monolithic floor when platforms are locked together.

Durability & Efficiency

· Platform only needs support in four corners for quick setup.

· Patented aluminum extrusion allows for guardrails, step units, closure panels, chair stops, and skirting clip attachment, with no loose parts.

· Platforms easily handled by two people.

· For use with all of Staging Concepts' supports.

Maintenance & Longevity

· To maximize the longevity of the platform, we recommend covering with a tarp or storing the platform under an overhead surface between use.

· The platform's frame includes a three-year warranty.

TECHNICAL SPECIFICATIONS

The Clima-Core is a single sided, weather-resistant portable platform. It is designed to function with all Staging Concepts' supports, and to comply with the following:

· Edging: 4" (101.6 mm) high, extruded 6005A-T61 aluminum frame, including protective edge, mill finish. Design frame to accept:

- Built-in Roto-Lock system
- Structural locking clip system
- Guardrails
- Chair stops
- Closure panels
- Step units
- Skirting clips

· Subfloor: 1" (25.4 mm) thick composite non-wood structural core.

· Finished surface: Textured black HDPE surface with UV inhibitor to provide additional protection to exterior exposure.

· Platform will support 150 lbs/square foot of uniformly distributed live load.

· Due to the lowered placement of the Roto-Lock unit to unit connectors, the Clima-Core cannot connect with our SC90 or SC97 platforms. Upon request, the Roto-Locks can be custom located to gang with either platform but this would affect the ability to replace the locks should it be necessary

· Platform extrusion accessory grooves are compatible with leading manufacturer's channel nuts for alternate attachment methods.

CLIMA-CORE PLATFORM SCHEMATICS

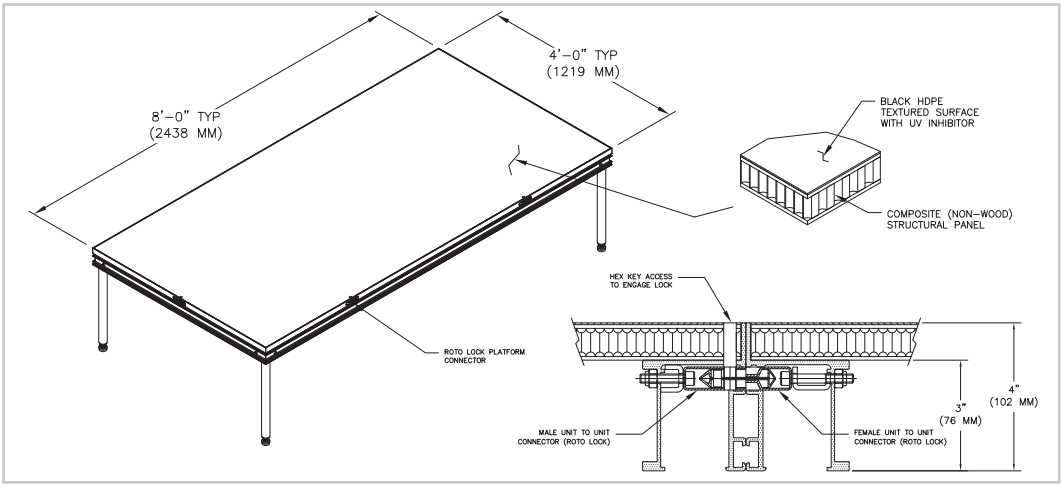

DIMENSIONS, WEIGHTS, AND FINISH OPTIONS

4' x 8' (1.22 m x 2.44 m)	(lbs/kg)
Textured Black HDPE	118/53.8

4' x 6' (1.22 m x 1.83 m)	(lbs/kg)
Textured Black HDPE	89/40.6

4' x 4' (1.22 m x 1.22 m)	(lbs/kg)
Textured Black HDPE	66/30.0

3' x 8' (0.92 m x 2.44 m)	(lbs/kg)
Textured Black HDPE	93/42.1

3' x 6' (0.92 m x 1.83 m)	(lbs/kg)
Textured Black HDPE	73/33.0

2' x 8' (0.61 m x 2.44 m)	(lbs/kg)
Textured Black HDPE	72/32.7

3.28' x 6.56' (1 m x 2 m)	(lbs/kg)
Textured Black HDPE	83/37.6

*Custom sizes and shapes are available upon request.

Aluminum Frame Options:

Mill finish, Powder coat finish (black or silver), Anodized finish (black or clear)

Patent Pending

THE COURIER®

A lightweight product weighing a total of six pounds, the Courier® is the perfect solution for conveniently transporting and storing platforms. The Courier platform transport is safe and easy to maneuver, and there are no tools required to assemble. This compact device easily attaches to Staging Concepts' proprietary SC90 Platform aluminum rail, allowing a single user to make their stage portable without any tools or loose parts. This product is easily installed with the simple tightening of a hand knob.

The Courier can also be used to maximize storage space, since its unique design allows for storing SC90 Platforms in an upright position. This device can lock into place with a simple, locking caster— allowing you to store safely and effectively.

Transporting SC90 Platforms has never been easier— the Courier is ready to travel after the twist of a knob, making staging set up easy and fast. The Courier is built in our US facility, incorporating the finest materials available.

Easily transport your platform with the Courier®.

CROWD CONTROL BARRICADES

Staging Concepts' Heavy Duty Crowd Control Barricades are manufactured to withstand the most demanding circumstances of any venue. These lightweight, steel, and aluminum constructed barricade sections only require two people for setup and take down. In addition, each section is equipped with the most effective, and yet the most simple, locking mechanism on the market, so that barricade walls of all sizes take only minutes to assemble. Each section can be folded compactly to fit almost any storage space. Staging Concepts' modular Crowd Control Barricades are sure to complement any performance.

Multiple Barricades

Single Barricade

The Versa-Corner is constructed from lightweight aluminum and comes with a clear or black powder coat finish. It provides flexibility to configure your barricades at nearly any angle and is designed with a swivel connection that allows the assembly to be used as an access gate or cable pass through.

ADVANTAGES

Safety

· Integral step-on barricade for security personnel to stand on and control the crowd

· Barricades lock together side-by-side to prevent crowd from breaking barricade wall

· Powder coat or corrosion resistant clear coat finish on barricade to prevent rust

Efficiency

· Barricade wall can be setup within minutes with as few as two people

· Folds down into storage position with one quick motion

· Storage carts are available: Each holds up to 10 barricades (optional fork straps available)

Variety

· Available in steel or aluminum

FINISHES

· Optional corners available with black or silver powder coat finish

TECHNICAL SPECIFICATIONS

Staging Concepts' Heavy Duty Crowd Control Barricade complies with the following:

· Material: HREW 14 gauge steel tubing and steel plate with steel mesh face panels or aluminum tubing, aluminum plate with aluminum mesh face.

· Finish: Black powder coat, corrosion resistant clear coat

DIMENSIONS, WEIGHTS, AND FINISH OPTIONS

Set Up Dimensions:

54.85" L x 48" W x 48" H
(1.39 m x 1.22 m x 1.22 m)

Folded Down Dimensions:

55.3" L x 48" W x 4" H
(1.4 m x 1.22 m x .1 m)
*Inside corner pieces and outside corner pieces available

Weight:

Steel: 187 lbs / 84.8 kg (black powder coat)

Aluminum: 122 lbs / 55.3 kg (corrosion resistant clear coat)

BARRICADE CART SCHEMATICS

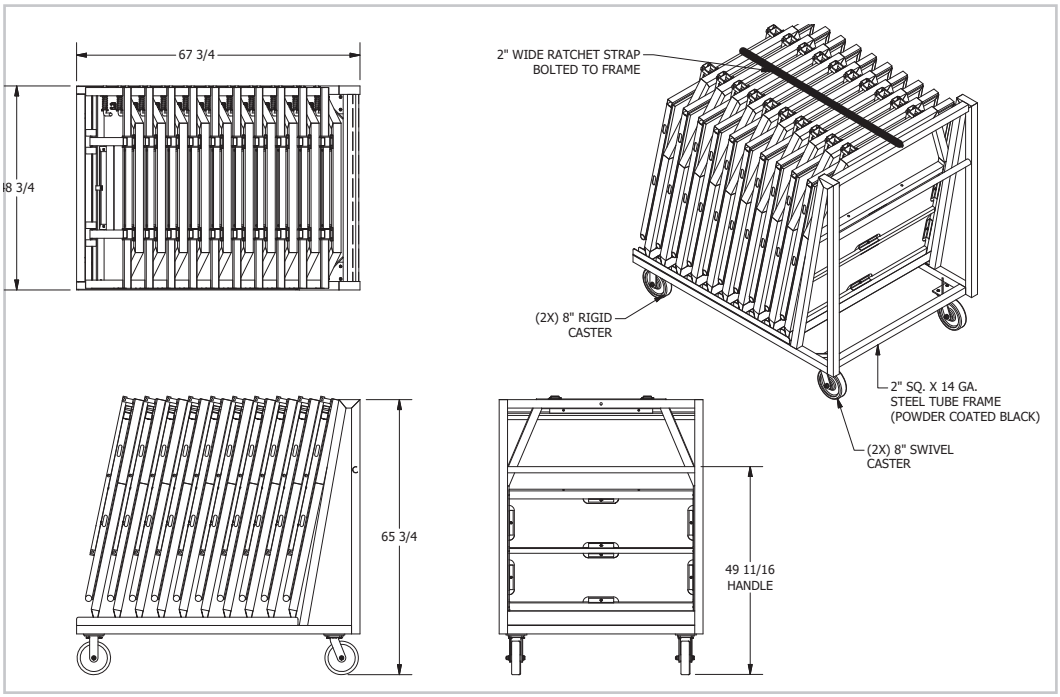

2-LINE AND IBC GUARDRAILS

To ensure safety, Staging Concepts manufactures two styles of guardrails: the standard 2-line (OSHA) and IBC (International Building Code) compliant guardrail. Both guardrails securely lock to the platforms. Customized styles are available upon request.

Stage with SC90 Standard 2-Line Guardrail

Riser System with SC90 IBC Compliant Guardrail

Guardrail Setup

Guardrail Storage Cart

STAGING CONCEPTS
A Trex® Company

We elevate all people's abilities to safely access and enjoy amazing life experiences.

7008 Northland Drive, Suite 150 · Minneapolis, MN 55428 · www.stagingconcepts.com · 763.533.2094

ADVANTAGES

Safety

· Prevents falling and keeps performers and patrons safe.

· Available in code compliant IBC (International Building Code) style (required above 30" [762 mm] when used for public access).

· Guardrail clamps are required to tie guardrail together side by side for rigidity and support.

Efficiency

· Attaches to platform extrusion through integral clip assembly with no loose parts.

· Tightens and locks to platform with T-handle hex key.

· Integral toeboard at bottom of each guardrail.

· Constructed of lightweight aluminum (not subject to rust).

Variety

· Available in 2-line (OSHA) style or IBC style

· Finishes available: Mill aluminum, powder coat finish (black or silver), or anodized finish (black or clear)

TECHNICAL SPECIFICATIONS

Performance Requirements:

· Top Rails of Guards:
  · Uniform load of 50 lb/ft (0.73 kN/m) applied in any direction
  · Concentrated load of 200 lbf (0.89 kN) applied in any direction

· Infill of Guards:
  · Concentrated load of 50 lbf (0.89 kN) applied horizontally on an area of 1 sq. ft. (0.093 sq. m) at any point in system, including intermediate rails, balusters, or other elements composing infill area

· Guardrail clamps are required between guardrail to comply with IBC and OSHA loading requirements. Assure clamps are secure at all times.

· Confirm with your local jurisdiction that the guardrail complies with local business codes prior to use.

· O.D.: 1.66" (42 mm)

· Guardrail height: 30" (762 mm), 36" (914 mm), 42" (1067 mm)

· Toeboard: 4" (102 mm) extruded aluminum, full width, finished to match other guardrail components.

· Finish: Mill aluminum, powder coat finish (black or silver), or anodized finish (black or clear)

DIMENSIONS, WEIGHTS, AND FINISH OPTIONS

SC90 Standard 2-Line Guardrail

Description:	lbs/kg
8' x 42" (2.44 m x 1067 mm)	30/13.6
6' x 42" (1.83 m x 1067 mm)	25/11.3
4' x 42" (1.22 m x 1067 mm)	20/9.1
3' x 42" (0.92 m x 1067 mm)	15/6.9
2' x 42" (0.61 m x 1067 mm)	10/4.6

SC90 IBC Compliant Guardrail

Description:	lbs/kg
8' x 42" (2.44 m x 1067 mm)	60/27.2
6' x 42" (1.83 m x 1067 mm)	45/20.5
4' x 42" (1.22 m x 1067 mm)	35/15.9
3' x 42" (0.92 m x 1067 mm)	20/9.1
2' x 42" (0.61 m x 1067 mm)	15/6.9

Other guardrail heights: 30" (762 mm) and 36" (914 mm) (ideal for sight lines when used as front guardrail)

Finish Options:

1. Mill finish aluminum
2. Powder coat finish (black or silver)
3. Anodized finish (black or clear)

*Custom sizes and finishes available upon request

HANDICAP ACCESSIBLE RAMPS

Many venues and events require handicap accessible spaces, which is why Staging Concepts offers portable handicap accessible ramps to match up to its portable platforms. These ramps are available to match your stage height, whether it is fixed or adjustable. Additionally, Staging Concepts' handicap accessible ramps can be custom designed to meet the needs of the space. To make ramps compliant with ADA standards, Staging Concepts recommends and provides quadruple, slip resistant surface along with a continuous handrail.

The following are example layouts for a 36" high Handicap Accessible Ramp matching up to a 36" high stage.

Side A

Side C

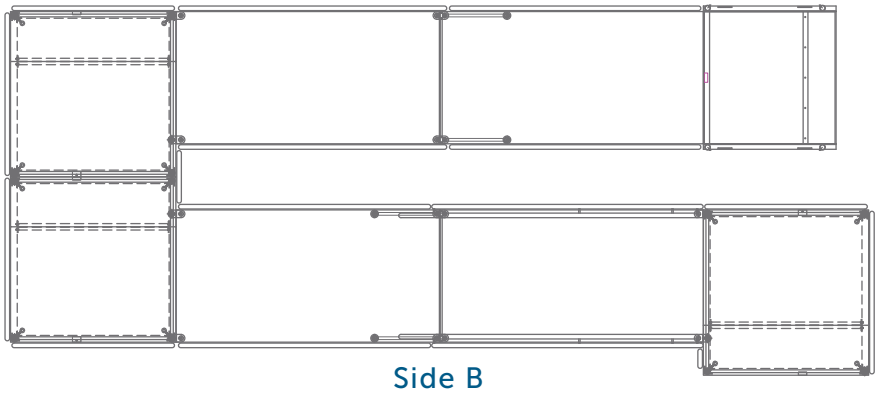

Side B

Plan View
36" high Handicap Accessible Ramp

Side A
Elevation View
36" high Handicap Accessible Ramp

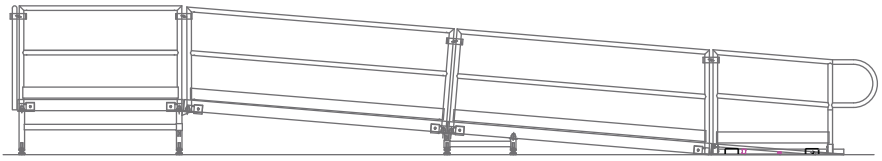

Side B
Elevation View
36" high Handicap Accessible Ramp

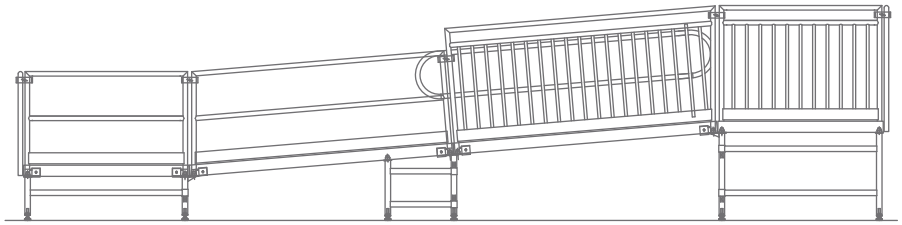

Side C
Elevation View
36" high Handicap Accessible Ramp

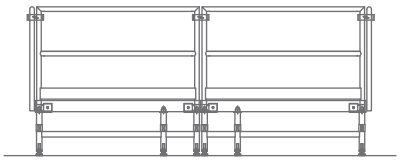

56" high Handicap Accessible Ramp for 56" high stage

(actual photo)

STAGING CONCEPTS
A Trex® Company

We elevate all people's abilities to safely access and enjoy amazing life experiences.

7008 Northland Drive, Suite 150 · Minneapolis, MN 55428 · www.stagingconcepts.com · 763.533.2094

MODA™ SEATING WAGON

The Moda™ Seating Wagon incorporates a minimalist, highly-engineered design that provides a lightweight, yet sturdy seating solution for theatres and auditoriums. For busy performance venues, Moda is built with high-end casters to enable as few as two people to quickly and easily move into storage. Designed to provide additional audience seating for any size venue, this customizable product offers unlimited flexibility in seating capacity, audience configurations, and storage capabilities.

Modular equipment allows for increased total capacity. Tri-casters allow for flexibility of movement and configuration. (right)

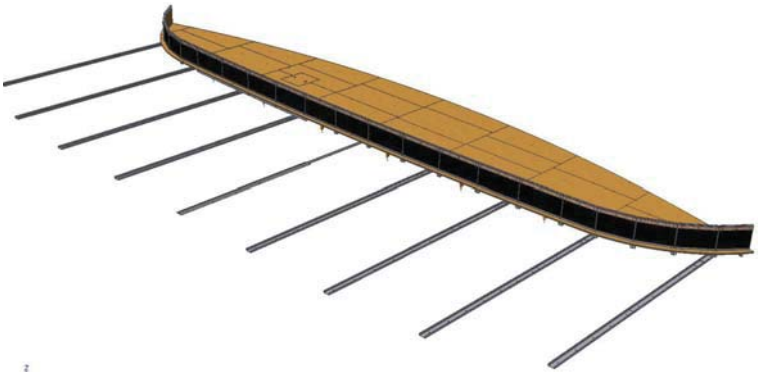

V-groove tracks are one option that allow for easy movement to and from storage underneath the stage. (left)

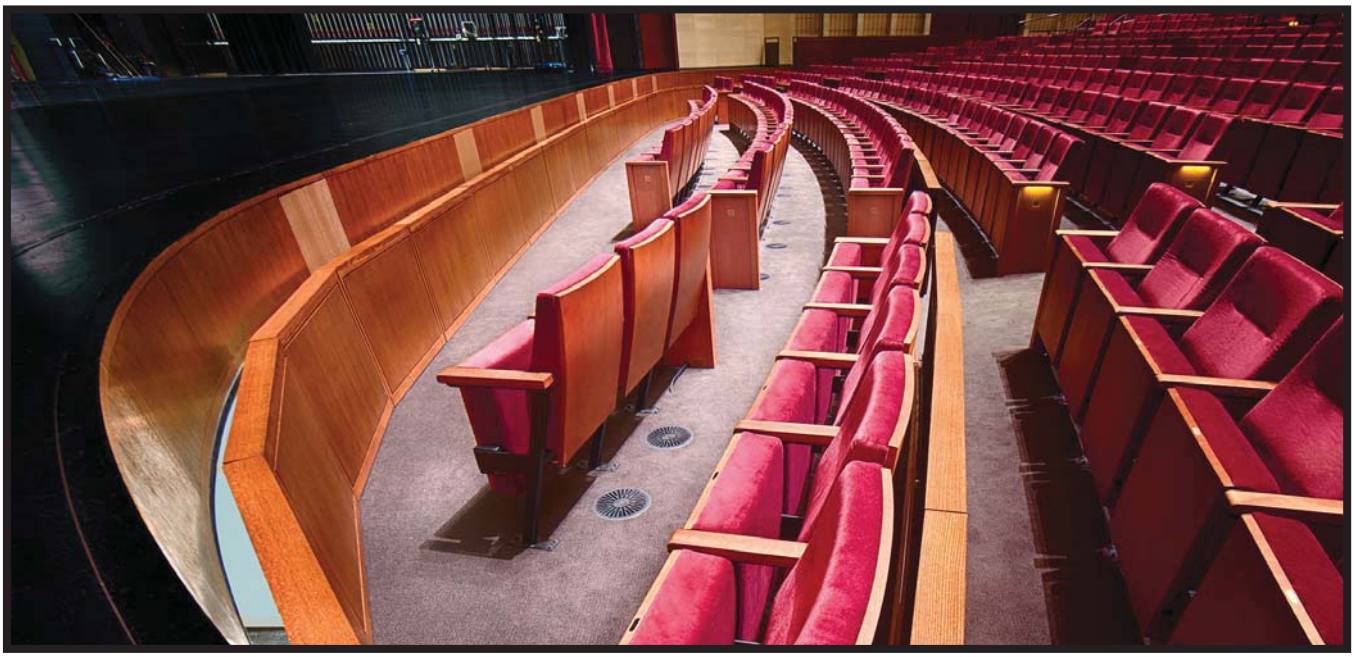

ADVANTAGES

Efficiency

· The Moda™ Seating Wagon is typically placed on the orchestra pit lift to provide additional audience seating, and can be moved to storage when it is not needed.

· Integral locks accessed from the top enable wagon sections to be connected together, without the use of custom tools.

Mobility

· Demountable railing is available for interchangeable use on pit lift or wagon.

· Movable by as few as two people at once.

· Mobility allows for easy storage underneath your stage.

Aesthetic

· Hard panel skirting is provided for the perimeter of the wagon, with customizable finishes.

· Acoustical sound damping is applied to the underside of each wagon.

· Seats mount directly to the top of the wagon.

Variety

· The Moda Seating Wagon can be field cut to the exact shape of the area, while allowing fascia panels and railing to remain at the edge of the wagon.

· Customized hatch locations for electrical, HVAC, audio, video, and other applications are available.

· Wagon is entirely customizable to fit in any space or venue.

· Modular equipment allows for increased total capacity, when needed.

TECHNICAL SPECIFICATIONS

The Moda Seating Wagon is entirely customizable, but is generally constructed with the following features:

- Surface: Two sheets of 3/4" PS-1 structural grade plywood.
- Frame consists of welded A500 steel tube and plate.
- Casters are made in a v-groove style on the track or with tri-casters.
- Typical wagon weight is 15 lbs. per square foot (73 kg/m2).
- Moda can range from 1' (30.5 cm) low-profile design height to a 6' (183 cm) profile design height.

MODA SEATING WAGON SCHEMATICS

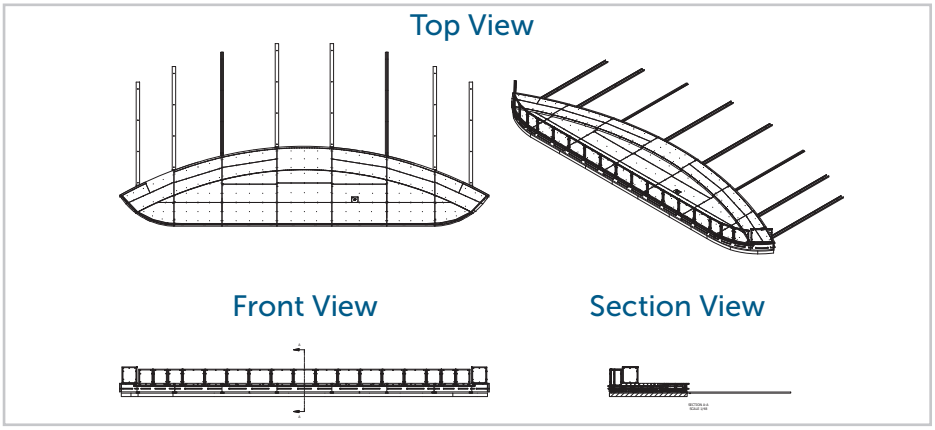

STAGING CONCEPTS
A Trex® Company

We elevate all people's abilities to safely access and enjoy amazing life experiences.

7008 Northland Drive, Suite 150 · Minneapolis, MN 55428 · www.stagingconcepts.com · 763.533.2094

ORNAMENTAL RAILING

We've taken safety and style to a whole new level!

In addition to our standard IBC and 2-Line Guardrails, we offer decorative railing styles that serve as a safety function while adding character to any venue or space. Ideal for theatre, production or entertainment applications, the Staging Concepts Ornamental Railing Line can be specifically designed and made to match the look and feel of any project. From classic to modern and sleek guardrail designs, Staging Concepts' Ornamental Railing Line includes the following: Invisirail, Gridguard, and Tensiline Guardrails.

A variety of finishes, colors, and infill materials are available upon request for all Staging Concepts Guardrail products to achieve the desired look for design specific projects.

Gridguard Guardrail

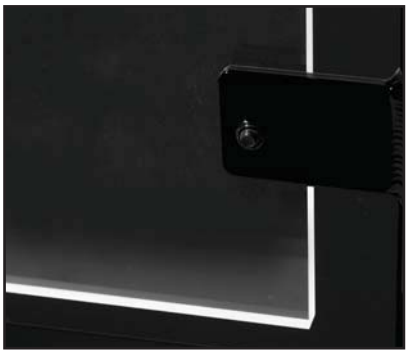

Invisirail Guardrail

Tensiline Guardrail

AVAILABLE GUARDRAILS

GRIDGUARD GUARDRAILS

The Gridguard series is available in a variety of wire mesh, perforated, and other infill materials to achieve an architecturally artistic look. Flexible mounting methods allow for use in nearly any location. The standard Gridguard is made with 1/4" diameter, 2×2 mesh or 1/8" perforated panels with 3/8" diameter holes. Custom mesh and perforated metal is available upon request.

INVISIRAIL GUARDRAILS

The Invisirail series is designed and constructed using acrylic, lexan or glass infill panels. The Invisirail series can be mounted as an independent railing or in combination with many other Staging Concepts' railing options, making it a perfect choice where sightline and safety are a must. The Invisirail's acrylic infill is available in clear, clouded or a variety of colors.

TENSILINE GUARDRAILS

The Tensiline stainless steel cable series is designed and constructed using a 3/16" diameter stainless steel cable and stainless steel fittings. The use of stainless steel cable provides minimal sightline obstruction for a sleek and modern look.

ADVANTAGES

Safety

· Prevents falling and keeps performers and patrons safe.

· Guardrail clamps are required to tie guardrail together side by side for extra rigidity and support.

· Integral toeboard at bottom of each guardrail.

Efficiency

· Attaches to platform extrusion through integral clip assembly with no loose parts.

· Tightens and locks to platform with T-handle hex key.

· Constructed of lightweight corrosion resistant aluminum - not subject to rust.

Variety

· Finishes available: Mill aluminum, powder coat finish (black or silver), or anodized finish (black or clear).

· Custom colors available upon request.

DIMENSIONS, WEIGHTS, AND FINISH OPTIONS

Ornamental Railing Description:

8' x 42" (2.44 m x 1067 mm)
6' x 42" (1.83 m x 1067 mm)
4' x 42" (1.22 m x 1067 mm)
3' x 42" (0.92 m x 1067 mm)
2' x 42" (0.61 m x 1067 mm)

Other guardrail heights: 30" (762 mm) and 36" (914 mm) (ideal for sightlines when used as front guardrail)

Finish Options:

1. Mill finish aluminum
2. Powder coat finish (black or silver)
3. Anodized finish (black or clear)

*Custom sizes and finishes available upon request

PREMIUM PORTABLE CHAIRS

Give your customers the exceptional experience they deserve. Our line of Premium Portable Seating allows you to treat your guests to first-class comfort. Explore our line of premium chairs to find the perfect seating selection for your venue. Choose from the plush VIP, sleek Club, and stylish Contour models.

Staging Concepts works closely with our chair vendors to offer you a wide selection of accessories to personalize and customize the seating in your facility. We'll work with you to make sure your facility needs are met and your vision comes to life.

ABS750
ABS750W (WIDE)

PS100

GS100

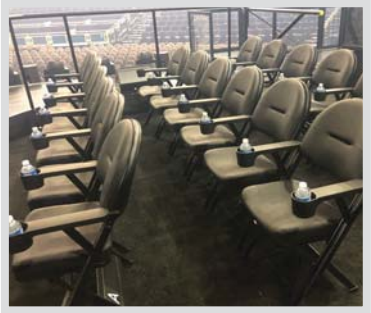

Custom Options

Add your unique style to the Premium Series with options like leg covers, slip covers, custom logos, permanent or detachable arms, wood grain or solid channel trim, custom upholsteries, cup holders, and other options.

ABS750 / ABS750W CHAIR

The most lavish of all our portable folding chairs, the fully upholstered ABS750 offers the comfort of a fixed spectator seat with the convenience of being portable. You'll find the ABS750 in black box theaters and any other space that requires the most luxurious portable seating. Available with or without leg covers, and in two widths.

Specifications

- Fully upholstered
- Plush seat back
- Uplift contour foam seat with ultraflex elastic seat webbing
- Double Tube & Steel Frame - Provides strength, durability, and flexibility
- Duraflex Action- Assures level seating on uneven surfaces by self-leveling
- Custom options and accessories available

PS100 CHAIR

Featuring a slimmer footprint than the ABS750 chair, the PS100 portable folding chair offers a distinctive seat back design and comfortable contour foam seat with ultraflex elastic seat webbing. Whether the PS100 chair is used as seating at sports complexes or public facilities, it's sure to make an impression on all your guests. The PS100 folding chair is also available in a 1-½" (38 mm) wider seat for added comfort. Front and rear leg covers available.

Specifications

- Front and back upholstery
- Uplift contour foam seat with ultraflex suspension
- Double Tube & Steel Frame - Provides strength, durability, and flexibility
- Duraflex Action- Assures level seating on uneven surfaces by self-leveling
- Custom options and accessories available

GS100 CHAIR

The GS100 portable folding chair combines the classic seat back design with a contour seat and ultraflex elastic seat webbing for an extra layer of comfort. The GS100 is also available in a wide version, with or without an uplift seat.

Specifications

- Uplift contour foam seat with ultraflex Suspension
- Double Tube & Steel Frame - Provides strength, durability, and flexibility
- Duraflex Action- Assures level seating on uneven surfaces by self-leveling
- Custom options and accessories available

RISER PLATFORM

The Riser Platform is a lightweight platform, suitable for seating riser applications. Like our standard SC90® Platform, the Riser Platform is constructed with an extruded aluminum frame that is combined with a sturdy 3/4" marinetech plywood substrate with an aluminum backer that provides a Class A fire rating. The Riser Platform is available in standard and custom sizes for both indoor and outdoor use. Standard sizes include 3' x 8' (.92 m x 2.44 m), 3' x 6' (.92 m x 1.83 m), 3' x 4' (92 m x 1.22 m), and 3' x 3' (.92 m x .92 m). A full line of accessories is available, as well as the multiple surface options as shown below.

3/4" (19 mm) marinetech plywood substrate

Platforms/Decks are available in the following surface options:

1. HDPE – black
2. HDPE – gray
3. Plyron – tempered hardboard
4. Carpet – black
5. Carpet – gray
6. Acrylic – opaque (clear acrylic also available)

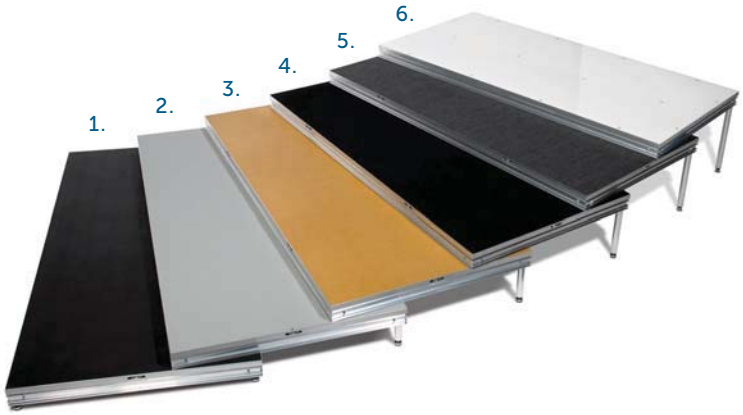

ADVANTAGES

Strength

· Constructed with 3/4" (19 mm) marinetech plywood substrate containing virtually zero voids.

· Engineered to support 100 lbs/square foot of uniformly distributed live load.

· Class A fire rating provided by aluminum skin backer on platforms with HDPE surface.

· Top locking Roto-Locks provide monolithic floor when platforms are locked together.

Durability & Efficiency

· Platform only needs support in four corners for quick setup.

· Aluminum extrusion allows for guardrails, step units, closure panels, chair stops, and skiritng clip attachment with no loose parts.

· Platforms easily handled by two people.

· For use with all of Staging Concepts' supports.

Variety

· Multiple surface options available: HPDE, commercial grade carpet, unfinished plywood, painted plywood, Plyron, acrylic

Field Repairability

· For those unavoidable accidents, repair/replace only damaged part of platform (platform surface lid, side of extrusion, corner piece, etc.), no need to replace entire platform. Ability to repair on site.

TECHNICAL SPECIFICATIONS

The Riser Platform is a single sided, indoor and outdoor, weather-resistant platform. It is designed to be fully field repairable, to function with all of Staging Concepts' supports, and to comply with:

· Edging: 3 3/4" (95 mm) high, extruded 6005A-T61 aluminum frame, including protective edge, mill finish. Design frame to accept:

- Built-in Roto-Lock system
- Structural locking clip system
- Guardrails
- Chair stops
- Closure panels
- Step units
- Skirting clips

· Subfloor: 3/4" (19 mm) marinetech plywood

· Finished surface: HDPE (black or gray), commerical grade carpet (black or gray), unfinished plywood, painted plywood (black), Plyron (tempered hardboard), acrylic (clear or opaque)

· Platform will support 100 lbs/square foot of uniformly distributed live load.

· Platform is IBC code compliant.

· Platform extrusion accessory groves are compatible with leading manufacturer's channel nuts for alternate attachment methods.

ALUMINUM FRAME OPTIONS:

· Mill finish
· Powder coat finish (black or silver)
· Anodized finish (black or clear)
· Custom finishes available upon request

DIMENSIONS, WEIGHTS, AND FINISH OPTIONS

3' x 8' (0.92 m x 2.44 m)	(lbs/kg)
HDPE Surface (black or gray)	88/39.9
Carpet Surface (black or gray)	88/39.9
Unfinished Plywood Surface	88/39.9
Painted Plywood Surface	88/39.9
Plyron Surface	99/44.9
Acrylic Surface	144/65.3

3' x 6' (0.92 m x 1.83 m)	(lbs/kg)
HDPE Surface (black or gray)	69/31.2
Carpet Surface (black or gray)	69/31.2
Unfinished Plywood Surface	69/31.2
Painted Plywood Surface	69/31.2
Plyron Surface	77/34.9
Acrylic Surface	111/50.3

3' x 4' (0.92 m x 1.22 m)	(lbs/kg)
HDPE Surface (black or gray)	50/22.6
Carpet Surface (black or gray)	50/22.6
Unfinished Plywood Surface	50/22.6
Painted Plywood Surface	50/22.6
Plyron Surface	55/24.9
Acrylic Surface	78/35.3

3' x 3' (0.92 m x 0.92 m)	(lbs/kg)
HDPE Surface (black or gray)	40/18.1
Carpet Surface (black or gray)	40/18.1
Unfinished Plywood Surface	40/18.1
Painted Plywood Surface	40/18.1
Plyron Surface	44/19.9
Acrylic Surface	62/28.1

*Custom sizes and surfaces are available upon request

RISER PLATFORM SCHEMATICS

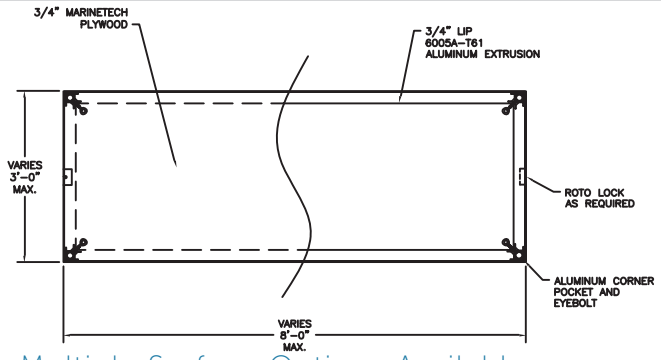

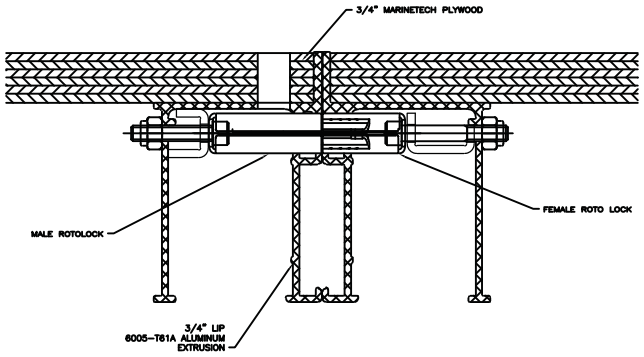

Multiple Surface Options Available

STAGING CONCEPTS
A Trex® Company

We elevate all people's abilities to safely access and enjoy amazing life experiences.

7008 Northland Drive · Suite 150 · Minneapolis, MN 55428 · www.stagingconcepts.com · 763.533.2094

ROLLING DRUM RISER

Staging Concepts' Rolling Drum Riser complements your performance stage setup. Its understructure has dual locking casters to keep the riser in place during performances. When not in use, its understructure collapses for easy storage and transport. The Rolling Drum Riser is for use with SC90 Platforms.

Rolling Drum Riser

SC90 Platform/Decks are available in the following surface options:

1. HDPE – black
2. HDPE – gray
3. Plyron – tempered hardboard
4. Carpet – black
5. Carpet – gray
6. Acrylic – opaque (clear acrylic also available)

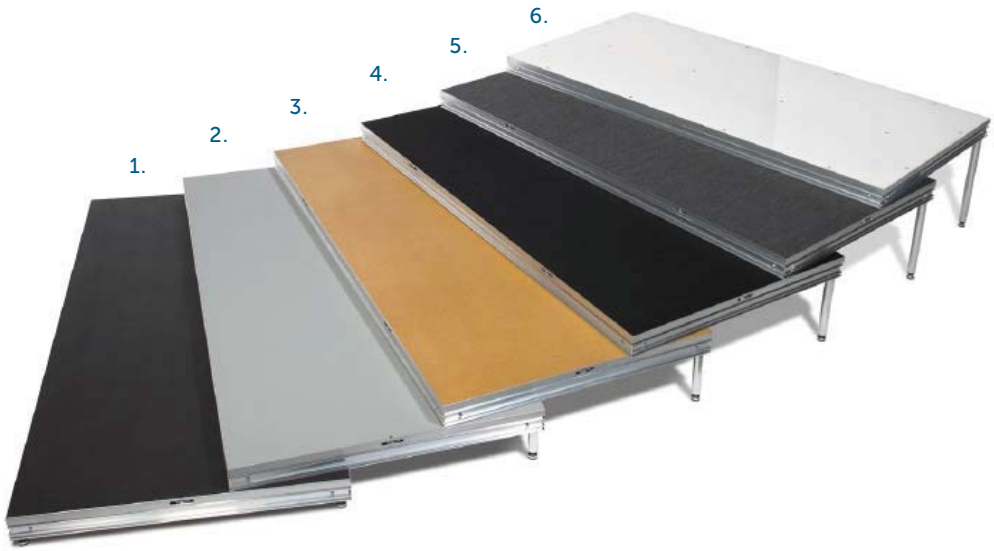

ADVANTAGES

Efficiency

- Sets up in minutes with only two people
- When platforms are taken off, drum riser understructure folds up quickly and easily into storage position
- Locking casters allow drum riser to roll into place and lock into static position

TECHNICAL SPECIFICATIONS

Staging Concepts' Rolling Drum Riser Understructure complies with the following:

- Material: HREW 14 gauge steel tubing
- Casters: 4" (102 mm) locking casters
- Finish: Black powder coat

DIMENSIONS, WEIGHTS, AND FINISH OPTIONS

8' L x 8' W x 13.5" H (2.44 m x 2.44 m x 342 mm)	43 lbs / 19.5 kg
8' L x 8' W x 16" H (2.44 m x 2.44 m x 406 mm)	45 lbs / 20.4 kg
8' L x 8' W x 18" H (2.44 m x 2.44 m x 457 mm)	48 lbs / 21.8 kg
8' L x 8' W x 24" H (2.44 m x 2.44 m x 610 mm)	50 lbs / 22.7 kg
8' L x 8' W x 30" H (2.44 m x 2.44 m x 762 mm)	55 lbs / 24.9 kg

Other sizes: 6' L x 6' W and 6' L x 8' W

*Custom sizes and surfaces are available upon request

ROLLING DRUM RISER UNDERSTRUCTURE SCHEMATICS

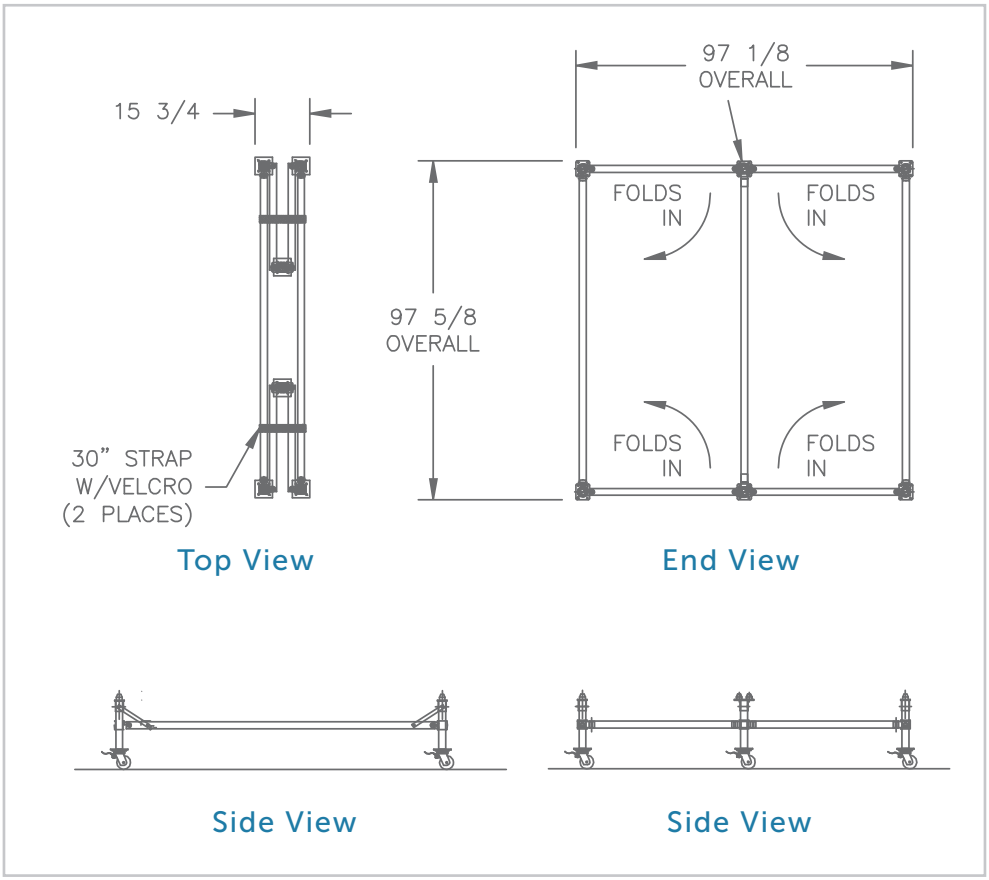

SC PRO RISER

The Staging Concepts Pro Riser is the latest solution for large scale, demountable seating risers. Highly customizable, the SC Pro Riser is meant to yield additional seating capacity for venues, without increasing setup difficulty. This product is designed to fit into tight, venue-specific storage areas, but also achieves a sturdy and permanent quality that allows your patrons to feel as though they are standing on solid ground.

With towers that combine both bridging from left to right and front to back, this caster-mounted product is long-lasting and transportable. Optional accessories include step units, handrails, guardrails, field walls and padding, camera or video platforms, and wind load anchors.

Leveling feet ensure that the rise of the product matches the adjacent concrete, allowing the riser to adapt to any unique area or space. Typical SC Pro Risers include an aluminum plank top surface and mounted seats. The SC Pro Riser is conveniently compatible with any type of seating you choose for your venue, and is highly adaptable to match the look and feel of your space. To ensure maximum comfort, this product features an aluminum closure for the back of seats to allow for the utmost enhanced patron experience.

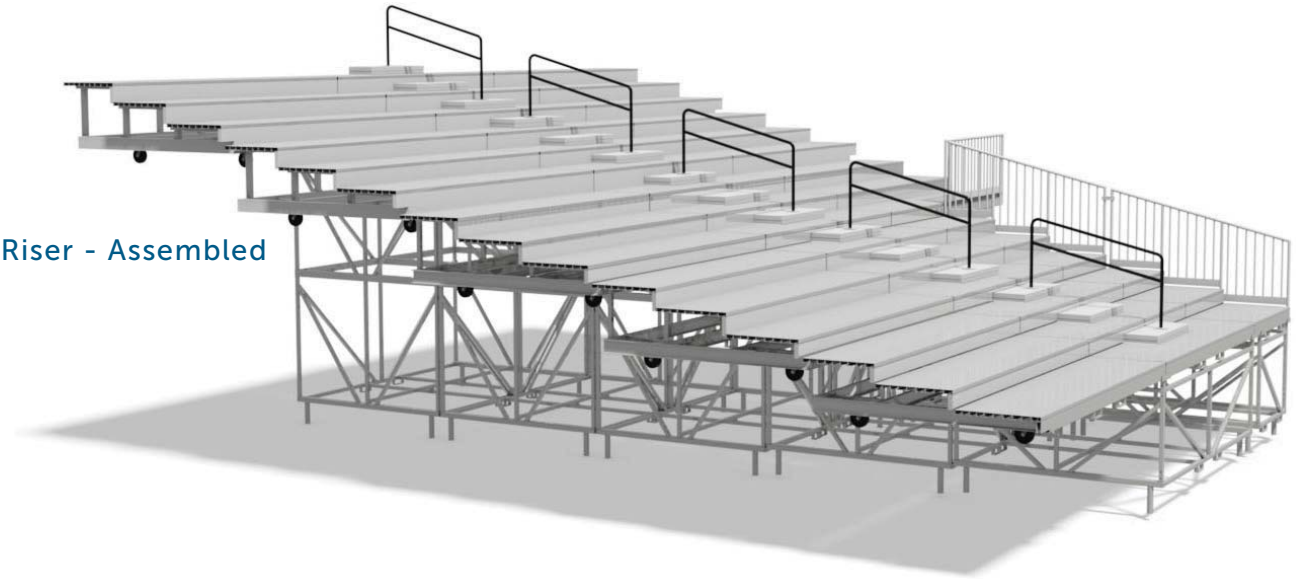

Pro Riser - Assembled

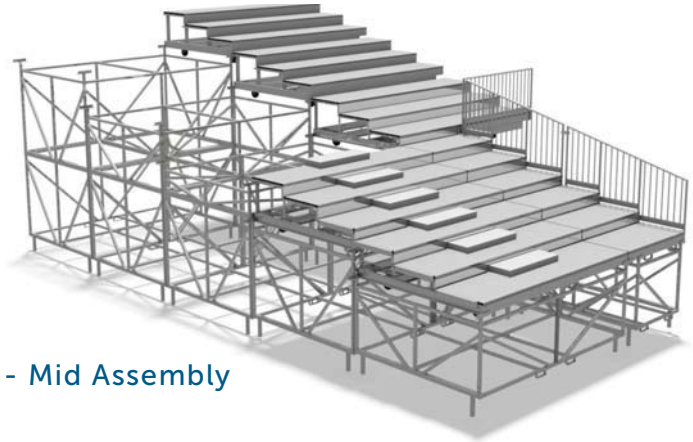

Pro Riser - Mid Assembly

Our team of sales professionals and design engineers stand ready to help you increase seating capacity in ways that create an attractive ROI. We can assist with a sightline study, storage space analysis, and a full engineering review of your flexible seating riser system.

SC90® LEG SUPPORTS

Our SC90® Leg Supports, used with the SC90, SC97, Riser, Trex®, and Clima-Core™ Platforms, guarantee maximum durability and strength. The leg supports feature the same high quality aluminum that is used on our platforms. The leg supports are available in both fixed and adjustable heights, and have bracing and leg clamps available for extra stability and rigidity at higher elevations. In addition, our leg supports can be used with the most challenging custom applications on stages, seating, and drum riser systems.

SC90 Platforms with Leg Supports, Bracing, and Leg Clamps

SC90 Optional Underside's Leg Storage

Detailed View of SC90 Leg Supports, Bracing, and Leg Clamps

SC90 Platform with SC90 Adjustable Leg Supports

ADVANTAGES

Leveling
· All SC90 Leg Supports are equipped with non-marring leveling feet.

· Counteract uneven floors with 1-1/2" (38 mm) of fine adjustment.

Rigidity
· At higher elevations, above 30" (762 mm), use stabilizer bracing and leg clamps to increase solidity of platforms.

Efficiency
· Only four leg supports necessary per platform for quick and easy setup.

· Leg supports are simply secured to the the platform by tightening eye-bolts in each corner.

· For use with all types of Staging Concepts' platforms.

Variety
· Available in fixed and adjustable heights.

· Used as supports for stages and risers

Stabilizer Bracing
Stabilizer bracing is required for use with SC90 leg supports when above 30" (762 mm.)

· Constructed of 1-1/4" (32 mm) Schedule 40, 6005A-T61 aluminum pipe.

· Connect to leg with slip-on structural fitting.

Leg Clamps
Leg clamps for use with the SC90 leg supports:

· Available in dual leg and quad leg styles.

· Clear zinc finish.

TECHNICAL SPECIFICATIONS

FIXED HEIGHT LEG SUPPORTS
The SC90 Fixed Height Leg Supports are for use with SC90, SC97, Riser, Trex, and Clima-Core Platforms.

· Legs: 1-1/4" (32 mm) Schedule 40, 6005A-T61 aluminum pipe. Join leg to platform in a compression loading condition. Hold in place by a 3/8" (10 mm) eye bolt.

- Legs are provided with non-marring leveling feet to allow for 1-1/2" (38 mm) of fine adjustment.
- Capable of being erected without use of tools.
- Finish: Mill aluminum, powder coat or anodized

ADJUSTABLE HEIGHT LEG SUPPORTS
The SC90 Fixed Height Leg Supports are for use with SC90, SC97, Riser, Trex, and Clima-Core Platforms.

· Legs: Constructed by sleeving two legs together with 2" (51 mm) spaced holes. Align holes with a 3/8" (10 mm) diameter fast pin for quick height changes. Join leg to platform in a compression leading condition. Hold in place by a 3/8" (10 mm) eye bolt.

- Outer leg: 1-1/4" (32 mm) Schedule 40, 6005A-T61 aluminum pipe.
- Inner leg: Custom extrusion, 6005A-T61 aluminum pipe.
- Terminate each leg with non-marring leveling feet to allow for 1-1/2" (38 mm) of fine adjustment. Fabricate foot from molded skid-resistant PVC pad.
- Capable of being erected without use of tools.
- Finish: Mill aluminum, powder coat or anodized

DIMENSIONS, WEIGHTS, AND FINISH OPTIONS

Fixed Height Supports
Available in virtually any height
Shortest height available: 4-1/4" (108 mm)

Tallest height available: 84" (2133 mm)

Adj. Height Supports
Aluminum Frame Options:
8"-12" (203 mm – 304 mm)
12"–16" (304 mm – 406 mm)
16"–24" (406 mm – 610 mm)
24"–36" (610 mm – 914 mm)
(requires bracing)
*Custom sizes are available upon request

SC90® PLATFORM

The SC90® Platform is the cornerstone of Staging Concepts' equipment line. This single-sided, portable platform is well-known throughout multiple markets for its strength, versatility, and durability. SC90 platforms are constructed of marine grade plywood and are intended for interior use or temporary use outdoors protected from rainfall and direct sunlight. The semi-permanent platform features a patented aluminum extruded frame and with the plywood's aluminum backer, the backer provides a Class A fire rating. It is recommended to store these platforms in an indoor temperature-controlled environment when not in use to prolong the use of the platforms. To also help prolong the usability and lifespan of the SC90 platform, these platforms should not be power washed or introduced to water.

SC90 platforms are weather-resistant and are available in standard and custom sizes. Standard sizes include 4' x 8' (1.22m x 2.44m), 4' x 6' (1.22m x 1.83m), 4' x 4' (1.22m x 1.22m), 3' x 8' (.91m x 2.44m), 3' x 6' (.91m x 1.83m) and 2' x 8' (.61m x 2.44m). The standard 4'x8' platforms will support 150 psf. of uniformly distributed live load. A full line of accessories is available for the portable stage decks and elevated platform risers, as well as multiple surface options.

SC90 Underside's Optional Leg Storage

Platforms/Decks are available in the following surface options:

1. HDPE – black
2. HDPE – gray
3. Plyron – tempered hardboard
4. Carpet – black
5. Carpet – gray
6. Acrylic – opaque (clear acrylic also available)

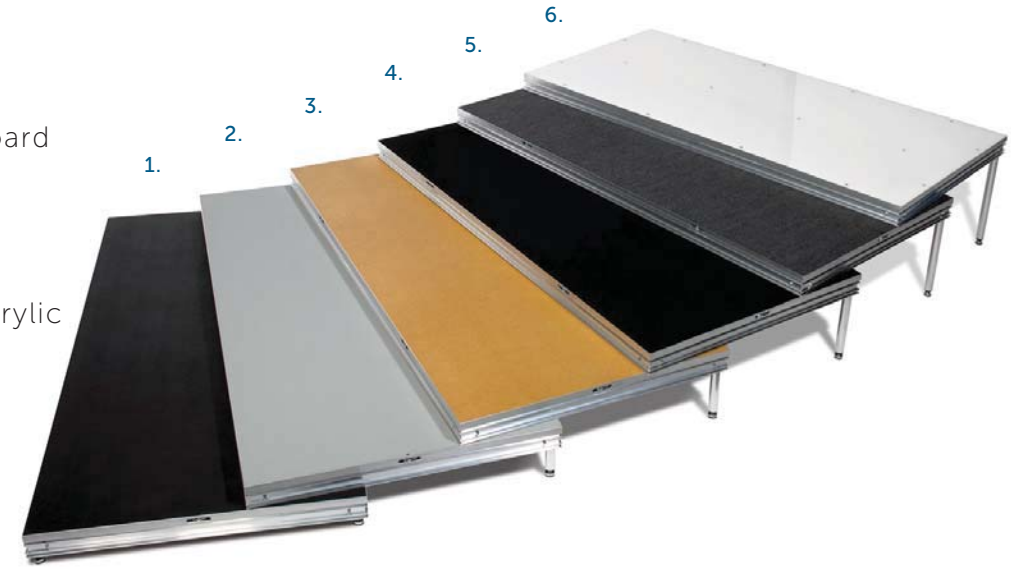

STAGING CONCEPTS
A Trex® Company

We elevate all people's abilities to safely access and enjoy amazing life experiences.

7008 Northland Drive · Suite 150 · Minneapolis, MN 55428 · www.stagingconcepts.com · 763.533.2094

ADVANTAGES

Strength

· Constructed with 1" (25 mm) thick exterior rated plywood substrate containing virtually zero voids.

· Engineered to support 150 lbs/square foot of uniformly distributed live load.

· Class A fire rating provided by aluminum skin backer on platforms with HDPE surface.

· Top locking Roto-Locks provide monolithic floor when platforms are locked together.

Durability & Efficiency

· Platform only needs support in four corners for quick setup.

· Patented aluminum extrusion allows for guardrails, step units, closure panels, chair stops, and skirting clip attachment, with no loose parts.

· Platforms easily handled by two people.

· For use with all of Staging Concepts' supports.

Variety

· Multiple surface options available: HDPE (black or gray), commercial grade carpet (black or gray), unfinished plywood, painted plywood (black), Plyron (tempered hardboard), acrylic (clear or opaque)

Field Repairability

· For those unavoidable accidents, repair/replace only damaged part of platform (surface, lid, side of extrusion, corner piece, etc.); no need to replace entire platform. Ability to repair on site.

TECHNICAL SPECIFICATIONS

The SC90 Platform is a single sided, portable platform. It is designed to be fully field repairable, function with all of Staging Concepts' supports, and to comply with the following:

· Edging: 4" (101.6 mm) high, extruded 6005A-T61 aluminum frame, including protective edge, mill finish. Design frame to accept:

- · Built-in Roto-Lock system
- · Structural locking clip system
- · Guardrails
- · Chair stops
- · Closure panels
- · Step units
- · Skirting clips

· Subfloor: 1" (25.4 mm) exterior rated, group 1 plywood.

- · Finished surface: HDPE (black or gray), commercial grade carpet (black or gray), unfinished plywood, painted plywood (black), Plyron (tempered hardboard), acrylic (clear or opaque)
- · Tongue and groove hardwood surface available upon request (specify wood species)

· Platform will support 150 lbs/square foot of uniformly distributed live load.

· Platform is weather-resistant and intended for interior use of temporary use outdoors protected from rainfall and direct sunlight.

· Platform extrusion accessory groves are compatible with leading manufacturer's channel nuts for alternate attachment methods.

SC90 PLATFORM SCHEMATICS

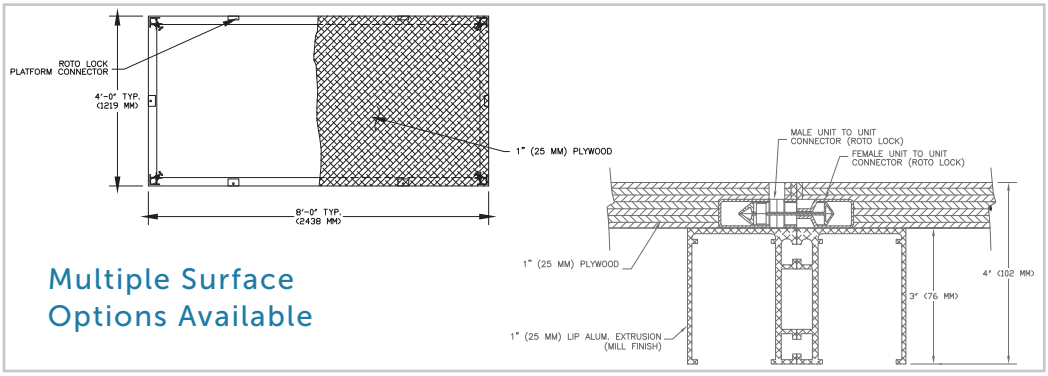

Multiple Surface Options Available

DIMENSIONS, WEIGHTS, AND FINISH OPTIONS

4' x 8' (1.22 m x 2.44 m)	(lbs/kg)
HDPE Surface (black or gray)	141/64
Carpet Surface (black or gray)	141/64
Unfinished Plywood Surface	141/64
Painted Plywood Surface	141/64
Plyron Surface	158/71.7
Acrylic Surface	245/111.1

4' x 6' (1.22 m x 1.83 m)	(lbs/kg)
HDPE Surface (black or gray)	110/49.9
Carpet Surface (black or gray)	110/49.9
Unfinished Plywood Surface	110/49.9
Painted Plywood Surface	110/49.9
Plyron Surface	122/55.3
Acrylic Surface	235/106.6

4' x 4' (1.22 m x 1.22 m)	(lbs/kg)
HDPE Surface (black or gray)	78/35.4
Carpet Surface (black or gray)	78/35.4
Unfinished Plywood Surface	78/35.4
Painted Plywood Surface	78/35.4
Plyron Surface	86/349
Acrylic Surface	133/60.3

3' x 8' (0.92 m x 2.44 m)	(lbs/kg)
HDPE Surface (black or gray)	111/50.3
Carpet Surface (black or gray)	111/50.3
Unfinished Plywood Surface	111/50.3
Painted Plywood Surface	111/50.3
Plyron Surface	125/56.7
Acrylic Surface	190/86.2

3' x 6' (0.92 m x 1.83 m)	(lbs/kg)
HDPE Surface (black or gray)	86/39
Carpet Surface (black or gray)	86/39
Unfinished Plywood Surface	86/39
Painted Plywood Surface	86/39
Plyron Surface	97/44
Acrylic Surface	151/68.5

2' x 8' (0.61 m x 2.44 m)	(lbs/kg)
HDPE Surface (black or gray)	83/37.6
Carpet Surface (black or gray)	83/37.6
Unfinished Plywood Surface	83/37.6
Painted Plywood Surface	83/37.6
Plyron Surface	93/342.2
Acrylic Surface	128/58.1

3.28' x 6.56' (1 m x 2 m)	(lbs/kg)
HDPE Surface (black or gray)	99/44.9
Carpet Surface (black or gray)	99/44.9
Unfinished Plywood Surface	99/44.9
Painted Plywood Surface	99/44.9
Plyron Surface	112/50.8
Acrylic Surface	177/80.3

*Custom sizes and surfaces are available upon request

Aluminum Frame Options:

Mill finish, Powder coat finish (black or silver), Anodized finish (black or clear)

SC97 ALL-ALUMINUM PLATFORM

The SC97 Platform is an all-aluminum weather resistant deck used mainly in sports stadiums and arenas. It is engineered for strength and durability, and is lightweight. All decking and aisle steps are made of non-slip ribbed extruded aluminum. The SC97 is flexible and can be used with all Staging Concepts' supports.

SC97 All-Aluminum Platform – Mill Finish

SC97 All-Aluminum Platform – Anodized Finish

ADVANTAGES

Durability

· Constructed of high-grade aluminum plank and extrusion.

· Engineered to support 150 lbs/square foot (610.3 kg/square meter) with additional loading available with the addition of I-Beams to the underside of the platform.

· Ribbed non-slip surface to ensure safety.

· Platforms lock together to provide monolithic floor.

· All-aluminum weather-resistant plaform will withstand all the elements.

Efficiency

· Platform only needs support in four corners for quick setup.

· Patented aluminum extrusion allows for guardrails, step units, closure panels, chair stops, and skirting clip attachment, with no loose parts.

· Platforms easily handled by two people.

· For use with all of Staging Concepts' supports.

Field Repairability

· For those unavoidable accidents, repair/replace only damaged part of platform (platform surface lid, side of extrusion, corner piece, etc.), no need to replace entire platform. Ability to repair on site.

TECHNICAL SPECIFICATIONS

The SC97 Platform is a single sided, weather-resistant portable platform. It is designed to be fully field repairable, to function with all of Staging Concepts' supports, and to comply with the following:

· Edging: 4-3/4" (120.65 mm) high, extruded 6005A-T61 aluminum frame, including protective edge, mill finish. Design frame to accept:

- Built-in locking system
- Structural locking clip system
- Guardrails
- Chair stops
- Closure panels
- Step units
- Skirting clips

· Floor: Non-slip, ribbed extruded aluminum with surface material thickness of not less than 0.090" (0.23 mm). Provide inverted "T's" at floor underside at approximately 3" (76 mm) of center, material thickness to meet design requirements.

- Through-bolt floor to frame cantilevers using self-tapping screws.

· Platform will support 150 lbs/square foot (610.3 kg/square meter)

· Platform extrusion accessory groves are compatible with leading manufacturer's channel nuts for alternate attachment methods.

DIMENSIONS, WEIGHTS, AND FINISH OPTIONS

Dimensions:	lbs/kg
4' x 8' (1.22 mm x 2.44 mm)	130/59
4' x 6' (1.22 mm x 1.83 mm)	122/55
4' x 4' (1.22 mm x 1.22 mm)	90/41
3' x 8' (0.91 mm x 2.44 mm)	122/55

*Custom sizes are available upon request

Finish Options:

Mill finish, Anodized finish (black or clear)

SC97 PLATFORM SCHEMATICS

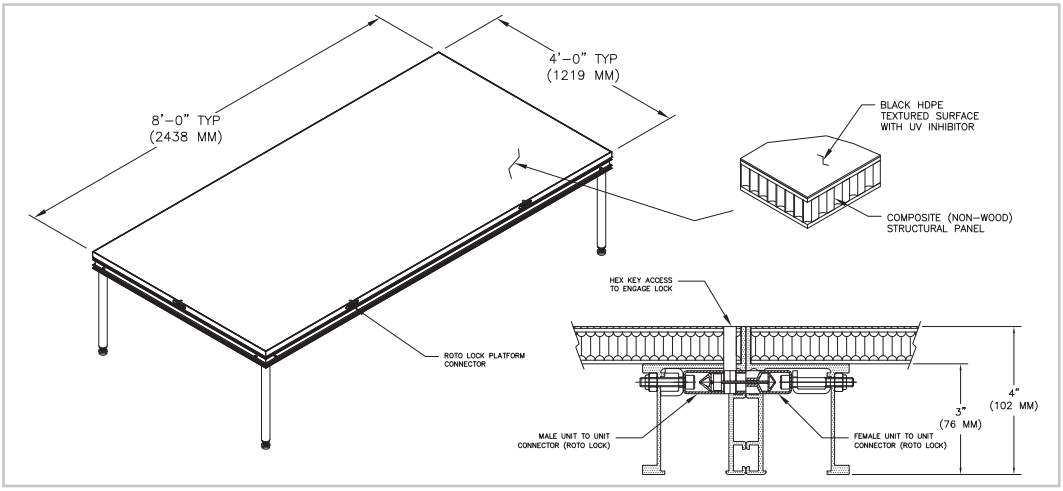

STAGING CONCEPTS
A Trex® Company

We elevate all people's abilities to safely access and enjoy amazing life experiences.

7008 Northland Drive · Suite 150 · Minneapolis, MN 55428 · www.stagingconcepts.com · 763.533.2094

SC100 FOLDING BRIDGE FRAME

The SC100 Folding Bridge Frame, also referred to as a C-frame, is a functional frame that allows bridging between platforms, saving valuable setup time. The frame, which is available in fixed and adjustable heights, folds flat and is self-contained. Custom sizes are available and allow you to use the SC100 with the SC90®, SC97, Riser, Trex® or Clima-Core™ Platform.

SC100 Full Setup Position

C-Frame Unit

Folded C-Frame Unit

SC100 Storage Cart – Single Hanger

ADVANTAGES

Efficiency

· "Bridges" platforms front to back and side to side, resulting in fewer supports for fast setup and strike.

· Locator nodes lock into place on each column and automatically align platforms and no need for readjustments.

· Setup easily by two people with no special tools.

· Platforms lock together to provide monolithic floor.

Adjustability

· Coarse and fine adjustment for uneven terrain or level changes.

· Wide range of adjustable heights available.

Variety

· Used as understructure for both flat stages and seating risers.

· Fixed heights available upon request.

Durability

· Constructed of ERW carbon steel.

· C-frames have black powder coat finish for rust prevention.

TECHNICAL SPECIFICATIONS

The SC100 Folding Bridge Frame is used with SC90, SC97, Riser, Trex, and Clima-Core Platforms. Design support system using DOM or ERW steel tubing and to comply with the following:

· Adjustable heights:
  16" - 22" (406 mm - 559 mm)
  18" - 24" (457 mm - 610 mm)
  24" - 36" (610 mm - 914 mm)
  32" - 42" (802 mm - 1066 mm)
  36" - 48" (914 mm - 1219 mm)
  · Adjust coarse height by 2" (51 mm) increments using a 3/8" (10 mm) locking pin. Allow 2" (51 mm) additional fine height adjustment through use of integral acme thread adjustable screw foot.

· Capable of being erected without use of tools.

· Main vertical members:
  2" (51 mm) OD x 12 gauge steel tube

· Telescoping columns:
  1-3/4" (45 mm) x 12 gauge steel tube

· Cross-bracing:
  1" (25 mm) x 2" (51 mm) x 14 gauge steel tube

· Finish: Black powder coat

DIMENSIONS, WEIGHTS, AND FINISH OPTIONS

Description	lbs/kg)
16" – 22" (406 mm – 559 mm)	59/26.8
18" – 24" (457 mm – 610 mm)	60/27.2
24" – 36" (610 mm – 914 mm)	72/32.7
32" – 42" (802 mm – 1066 mm)	83/37.5
36" – 48" (914 mm – 1219 mm)	96/43.5

*Fixed heights and custom sizes available upon request

Finish:

· Black powder coat

SC100 STORAGE CART - DOUBLE HANGER SCHEMATICS

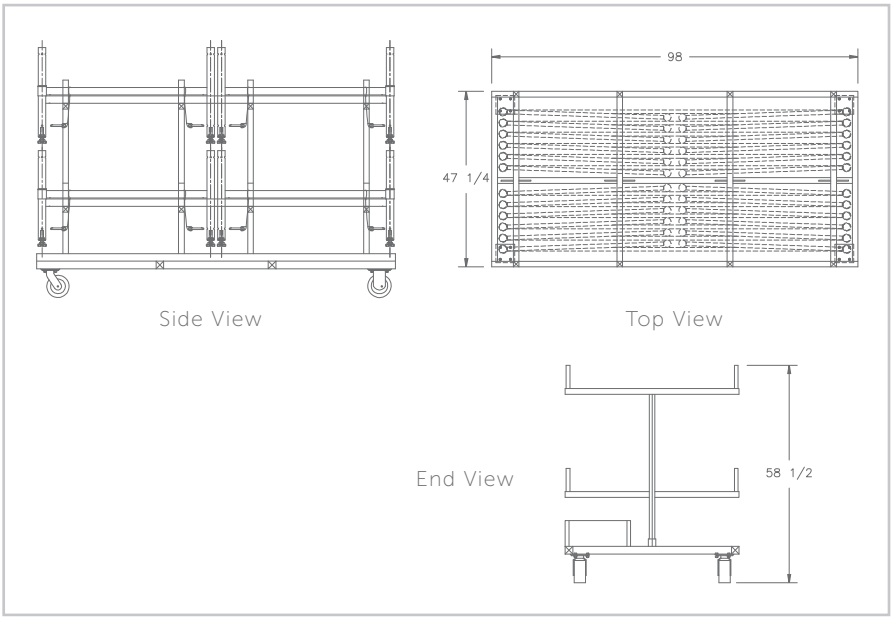

SC2000 SEATING RISER SYSTEM

The SC2000 Seating Riser System is ideal for facilities that have flexible seating needs. The ability to easily change the seating accommodations of your venue can enhance performances and increase revenue. Our seating risers are designed and engineered to provide maximum flexibility for challenging configurations that demand quick and easy setup.

The key features of the SC2000 are its quick setup, flexible configurations, and compact storage. The understructure unfolds like an accordion and expands to fill the designated space. Only two people are required for setup and custom sizes are available to fit into even the most unusual spaces. Should you need less or no seating at all, the SC2000 folds into 15% of its expanded size and easily rolls away on retractable casters for storage.

SC2000 Seating Riser Set-Up

One Tread Stair Unit with Aisle Lighting

SC2000 Understructure – Folded Position

SC2000 Understructure – Stand Alone

SC2000 with Bridged Platforms Removed

STAGING CONCEPTS
A Trex® Company

We elevate all people's abilities to safely access and enjoy amazing life experiences.

7008 Northland Drive · Suite 150 · Minneapolis, MN 55428 · www.stagingconcepts.com · 763.533.2094

ADVANTAGES

Efficiency

· SC2000 understructure is rolled into place on casters and then lowered onto its legs with a turn of a lever. Platforms can be in place while understructure is rolling on its casters.

· Platforms bridge between SC2000 understructures, saving time with fewer understructures to setup and strike.

· Rotation of arms around castings provides a smooth and quick fold for setup and strike.

· SC2000 is quickly and easily setup by two people.

· For use with all of Staging Concepts' platforms.

· SC2000 storage position is approximately 15% of its expanded size.

Adaptability

· Leveling feet allow for fine adjustment on uneven flooring.

· Example: Turn a seven level seating riser into a two level seating riser by unbolting at any level.

· Add future additional levels to seating riser system by bolting the new levels to the casting assembly of current equipment; keeping the system as one unit assembly rather than two risers.

Safety

· Entire SC2000 understructure frame rotates around arms of casting, which keeps it from folding too tightly and prevents SC200 from being top heavy and tipping over.

Field Repairability

· For those unavoidable accidents, repair/replace only damaged part of SC2000 understructure. The castings allow you to bolt and unbolt all necessary bracing or structural support.

· Repair/replace parts on site.

· Brackets that carry the platforms are bolted (not welded) into place, making future changes or field repairing the SC2000 understructure possible.

TECHNICAL SPECIFICATIONS

The SC2000 Seating Riser Understructure is for use with SC90®, SC97, Riser, Trex®, and Clima-Core™ Platforms. It is designed to permit bridging of platforms between understructures, and to comply with the following:

· Casters: Design casters to meet the following:

- Attach to the base of understructure to ease the extension, closure and transport of understructure.
- Engage and disengage using a lever arm handle.
- Disengaging the casters allows full support of seating riser on main vertical columns.
- Maximum lever handle force requirements shall meet OSHA regulations.

· 3" (76 mm) fine adjustment through use of integral acme thread adjustable screw foot. Mount screw foot to bottom of main vertical members.

· Capable of being erected by two people without tools, and must fold to 15% of overall length.

· Finish: Black powder coat

· Main vertical members: 2" (51 mm) OD by gauge ERW carbon steel round mechanical tubing

· Main horizontal members: 2" x 2" (51 mm x 51 mm) by 14 gauge carbon steel square tubing

· Cross bracing: Low carbon HR flat bar

· Main pivot connection: Aluminum casting

DIMENSIONS, WEIGHTS, AND FINISH OPTIONS

The SC2000 Seating Riser Understructure has a typical 7" rise between levels.

Please call your sales representative to discuss your specific seating riser needs.

SC2003 ROLLING STAGE

The SC2003 Rolling Stage has a retractable caster assembly to easily roll across a flat floor when completely assembled. The stage consists of a support structure and three 4' x 8' SC90 Platforms, creating an 8' x 12' area. Multiple rolling stages can bridge SC90 Platforms to create a larger performance area. When not in use, the support frames can be used as a platform storage cart (pictured below).

SC2003 Rolling Stage with Bridged Platforms

SC2003 Rolling Stage: 8' x 12'

Multi-Functional Support Frame used as Platform Storage Cart

ADVANTAGES

Efficiency

· "Bridges" platforms front to back and side to side, resulting in fewer supports for fast setup and strike.

· Locator nodes lock into place on each column and automatically align platforms; no need for readjustments.

· Setup easily by two people with no special tools

· For use with all of Staging Concepts' platforms.

Adjustability

· Available in adjustable height ranges of 36" - 50" (914 mm - 1270 mm) and 48" - 72" (1219 mm - 1829 mm)

· Leveling feet allow for fine adjustment.

Durability

· Constructed of durable ERW carbon steel.

· Support structure has black powder coat finish to prevent rusting.

Storability

· Support frame able to be used as a storage cart for platforms whe not setup as a stage.

TECHNICAL SPECIFICATIONS

The SC2003 Rolling Stage understructure, used with SC90®, SC97, Riser, Trex®, and Clima-Core™ Platforms, is designed to permit bridging of platforms betweens supports, and complies with the following:

· Adjustable heights:
36" - 50" (914 mm - 1270 mm) and 48" - 72" (1219 mm - 1829 mm)
  · Adjust course height by 4" (102 mm) increments using a 5/8" (16 mm) locking pin. Allow 3" (76 mm) additional fine height adjustment through use of integral acme thread adjustable screw foot.

· Capable of being erected without use of tools.

· Main vertical members: 2" (51 mm) OD by 12 gauge ERW carbon steel round mechanical tubing.

· Main horizontal members: 2" (51 mm) by 2" (51 mm) by 14 gauge carbon steel square tubing.

· Cross bracing: 0.1875" (5 mm) by 1" (25 mm) low carbon HR flat bar.

· Main pivot connection: aluminum casting, 380 aluminum alloy

· Casters: Design casters to meet the following:
  · Attach to base of understructure to ease the extension, closure and transport of understructure.
  · Engage and disengage using a lever arm handle.
  · Disengaging the casters will allow full support of the stage on main vertical columns.
  · Maximum lever handle force requirements shall meet OSHA regulations.

DIMENSIONS, WEIGHTS, AND FINISH OPTIONS

Dimensions:	(lbs/kg)
36" – 50" (914 mm x 1270 mm) adjustable height	550/249.5
48" – 72" (1219 mm x 1829 mm) adjustable height	600/272.2

*Custom sizes are available upon request

Finish:

· Black powder coat

SC2003 ROLLING STAGE SCHEMATICS

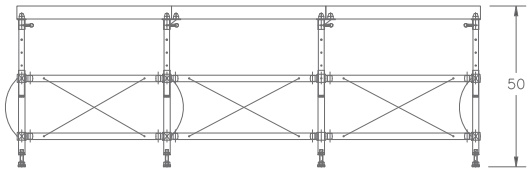

12' Side View at 50" Height

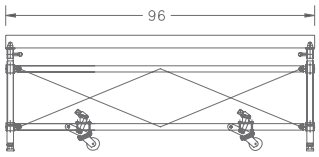

8' Side View

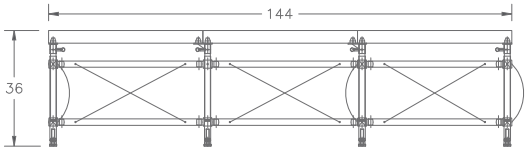

12' Side View at 36" Height

STAGING CONCEPTS
A Trex® Company

We elevate all people's abilities to safely access and enjoy amazing life experiences.

7008 Northland Drive · Suite 150 · Minneapolis, MN 55428 · www.stagingconcepts.com · 763.533.2094

SC9600 BRIDGE SUPPORT SYSTEM

For quick, easy setup with the strength and durability that is standard with all Staging Concepts' products, use the SC9600 Bridge Support System. This system "bridges" platforms from right to left and front to back. The SC9600 Bridge Support System consists of two end frames that lock together with both horizontal and diagonal snap bracing for ultimate support. Also included are four top plates in single, dual, or quad node design. The SC9600 is available in fixed or adjustable heights and is available in two versions: Arena Style and All-Terrain Style.

The Arena Style SC9600 adjusts with interior tubes that telescope upward from the top of the frame. This design allows the platform height to be adjusted quickly, with the frames in place.

Our second version, the All-Terrain Style SC9600, is great for outdoor use on uneven ground. The interior tubes, which telescope downward from the bottom of the frame, allow each of the legs to be set at different heights.

SC9600 Full Setup

SC9600 Storage Cart

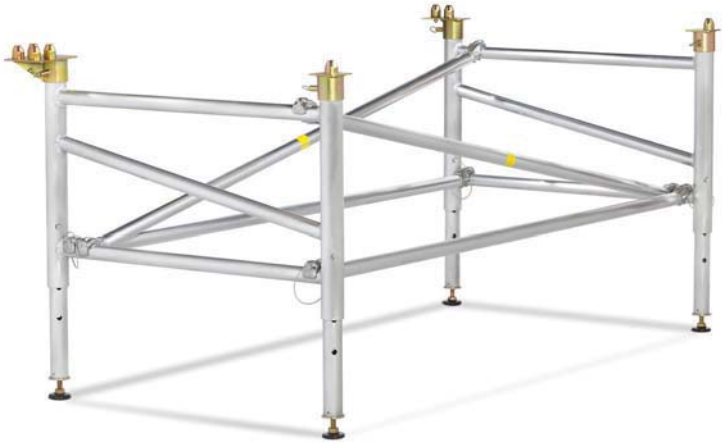

SC9600 Bridge Support System without Platform

STAGING CONCEPTS
A Trex® Company

We elevate all people's abilities to safely access and enjoy amazing life experiences.

7008 Northland Drive · Suite 150 · Minneapolis, MN 55428 · www.stagingconcepts.com · 763.533.2094

ADVANTAGES

Efficiency

· "Bridges" platforms front to back and side to side, resulting in fewer supports for fast setup and strike.

· Horizontal and diagonal braces "snap" into place with snap hooks for quick and simple assembly.

· Locator nodes lock into place on each column and automatically align platforms; no need for readjustments.

· Setup easily by two people with no special tools.

· For use with all of Staging Concepts' platforms.

Variety

· All-Terrain style SC9600 Bridge Support System is ideal for outdoor applications.

· Arena Style SC9600 Bridge Support system suits indoor venues.

· Fixed heights available upon request.

Durability

· Constructed of lightweight aluminum.

· Not subject to rust.

TECHNICAL SPECIFICATIONS

The SC9600 Bridge Support System is used with the SC90®, SC97, Riser, Trex®, and Clima-Core™ Platforms. It is designed to comply with the following:

· Adjustable heights:
24" - 36" (610 mm - 914 mm)
36" - 54" (914 mm - 1372 mm)
48" - 76" (1219 mm - 1930 mm)
  · Adjust course height by 4" (102 mm) increments using a 5/8" (16 mm) locking pin. Allow 3" (76 mm) additional fine height adjustment through use of integral acme thread adjustable screw foot.

· Capable of being erected without use of tools.

· Main vertical members: 2-1/2" (64 mm), Schedule 40, 6005A-T61 aluminum pipe.

· Main horizontal members: 2" (51 mm) OD 6005A-T61 aluminum pipe.

· Telescoping columns: 2" (51 mm) IPS Schedule 80, 6005A-T61 aluminum tubing.
  · Manually operated quick release structural fitting to each end.

DIMENSIONS, WEIGHTS, AND FINISH OPTIONS

SC9600 Bridge Support System

All-Terrain and Arena Styles

Description	lbs/kg
24" – 36" (610 mm – 914 mm) adjustable height	76/34.5
36" – 54" (914 mm – 1372 mm) adjustable height	91/41.3
48" – 76" (1219 mm – 1930 mm) adjustable height	106/48.1

*Custom sizes are available upon request

Top Plates Allow for Support of Up to Four Platforms

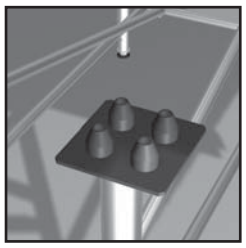

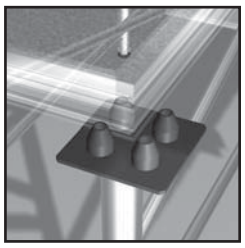

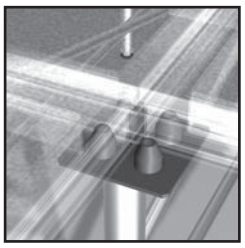

SC9600 BRIDGE SUPPORT SCHEMATICS

Arena Style SC9600 Bridge Support System

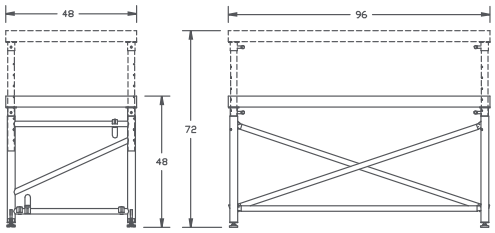

All-Terrain Style SC9600 Bridge Support System

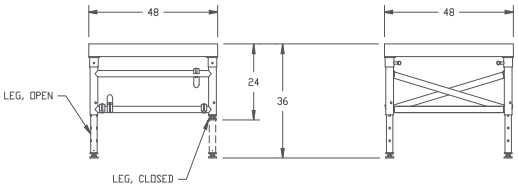

SEATING RISER ACCESSORIES

Staging Concepts has top-of-the-line accessories for Seating Riser systems created with the SC2000 understructure, SC90 legs and bracing, or our bridge supports. All work and fit together seamlessly to enhance the quality of your facility. Aisle lighting is available to guide patrons to their seats and ensure safety during dimly lit performances. Closure panels and chair stops secure chairs from slipping between levels and create a finished appearance. All accessories attach firmly to our platform extrusion with no loose parts.

SC2000 Seating Riser with Aisle Lighting, Closure Panels, and IBC Guardrail

Detailed View of Closure Panels

Detailed View of Chair Stop

ADVANTAGES

Aisle Lights

· Manufactured as a component of closure panels for easy of installation.

· Consists of rope lighting and aluminum extrusion (available with powder coat finish.)

Closure Panels

· Constructed of 1" (25 mm) thick plywood substrate with a HDPE or carpet surface.

· Acts as a chair stop and prevents tripping.

· Quickly and securely attaches to platform extrusion with no loose parts.

· Provides a clean, finished look.

Chair Stops

· Prevents chairs from slipping between levels or falling off edge of platform.

· Quickly and securely attaches to platform extrusion with no loose parts.

· Available as mill aluminum, black powder coat, silver powder coat, black anodized, or clear anodized finish.

TECHNICAL SPECIFICATIONS

Aisle Lights

· Lights: UL approved, 12 volt or 24 volt (low voltage):

  · Transformer and wiring: Install hidden below platforms.

  · Bulb color: Clear

· Fully enclose rope lighting in aluminum aisle strip that attaches to top of closure panel or step unit. Design aluminum aisle strip to cast light downward to highlight stair tread in front of it.

· Equip closure panel or stair tread to allow for attachment to extrusion of platform.

Closure Panels

· Provided where rise in height exceeds 6" (152 mm), or as directed by design requirements.

· Material: Plywood substrate construction. Provide polyethylene t-molding at top.

· Finish: Match the platform surface.

· Attach the closure panels with spring-loaded clips or AVK clips.

Chair Stops

· Material: Aluminum extrusion

· Finish: Mill aluminum, black powder coat, silver powder coat, black anodized, or clear anodized

· Attach chair stop to platform extrusion.

DIMENSIONS, WEIGHTS, AND FINISH OPTIONS

Aisle Lights

Contact your sales representative for specific details.

*Custom sizes and finishes available upon request

Closure Panels

Typically manufactured in 8' (2.44 m) lengths with 6" (152 mm), 7" (178 mm), or 8" (203 mm) heights

Contact your sales representative for more information.

*Custom sizes and finishes available upon request

Chair Stops

Dimensions:	(lbs/kg)
96" L x 1.5" W (2438 mm x 38 mm)	8/3.6
72" L x 1.5" W (1829 mm x 38 mm)	6/2.7
48" L x 1.5" W (1219 mm x 38 mm)	4/1.8
36" L x 1.5" W (914 mm x 38 mm)	3/1.4

Aluminum Finish Options:

1. Mill finish
2. Powder coat finish (black or silver)
3. Anodized finish (black or clear)

*Custom sizes and finishes available upon request

STAGE SKIRTING

Add Staging Concepts' stage skirting to your stage for a clean, polished look. Our stage skirting simply clips into our platform extrusions using extruded plastic clips with hook Velcro™ for completely invisible attachment. Skirting is available in both fixed and adjustable heights.

Stage with Skirting

Patented Skirting Attachment

STAGE SKIRTING COLORS*:

Poly Material: Call for other fabric and color choices.

*Colors shown are approximately the same as product. Some variation may occur.

WHITE	IVORY	BUTTERCREAM	DIFFUSED LIGHT	BALLET	IRIS MIST	LAVENDER HAZE	CARIBBEAN	MIST	TOUCH OF LIME
CREAM	DUME	YELLOW CHIFFER	PEACH II	BLUSH	LILAC	LUNAR	BLUE/GREY	SAGE	TUSCAN OLIVE
ARCTIC GREY	DUNE II	SUMMERSET	SHRIMP TONE	QUARTZ	LILAC MIST	LAVENDER	ALPS BLUE	LT. JADE	KIWI
GREY	APRICOT	PALE GOLD	SALMON	ATOMIC RED	PURPLE	VIOLET	CADET BLUE	JADE II	GREENELLA
CHARCOAL	NEW CLAY	COGNAC	NAVY	BURGUNDY	ROYAL BLUE	BRIGHT BLUE	SEASIDE GREEN	KELLY GREEN	BLACK
WARM BROWN	COPPER	ROSEWOOD	BORDEAUX	PLUM	PURPLE II	LT. NAVY	DK. GREEN	BASIL	

STAGING CONCEPTS
A Trex® Company

We elevate all people's abilities to safely access and enjoy amazing life experiences.

7008 Northland Drive · Suite 150 · Minneapolis, MN 55428 · www.stagingconcepts.com · 763.533.2094

ADVANTAGES

Efficiency

· Easily attaches to Staging Concepts' platforms with patented plastic skirting clip safety.

· Available in a variety of colors, heights, and lengths.

· Fixed and adjustable heights available

TECHNICAL SPECIFICATIONS

Staging Concepts' Stage Skirting complies with the following:

· Material: Poly or velour fabric, fire retardant to NFPA 701 with reinforced webbing at top and loop Velcro™.

· Fullness: 50% fullness

· Pleating: Box pleat is standard; shirred pleat and no pleat also available.

· Attachment: Extruded plastic clip with hook Velcro™.

DIMENSIONS, WEIGHTS, AND FINISH OPTIONS

Standard Fixed Heights:

12" (305 mm)
18" (457 mm)
24" (610 mm)
30" (762 mm)
36" (914 mm)
40" (1016 mm)
42" (1067 mm)
48" (1219 mm)
54" (1372 mm)
60" (1524 mm)

Standard Adj. Heights:

16" – 24" (406 mm – 914 mm)
24" – 36" (610 mm – 914mm)
36" – 48" (914 mm – 1219 mm)
36" – 56" (914 mm – 1422 mm)
48" – 72" (1219 mm – 1829 mm)

*Custom heights available upon request.

FIXED AND ADJUSTABLE HEIGHT STAIR UNITS

For ultimate convenience, Staging Concepts manufactures both Fixed and Adjustable Height Stair Units that provide access to any height stage. Step units can include locking mechanisms that attach quickly and firmly to any of Staging Concepts' decks. The Fixed Height Stair Unit is available in a Simple Step Unit (for lower fixed height stages) and a Raker Stair Unit (for taller fixed height stages), and can be custom manufactured to fit the height of your stage.

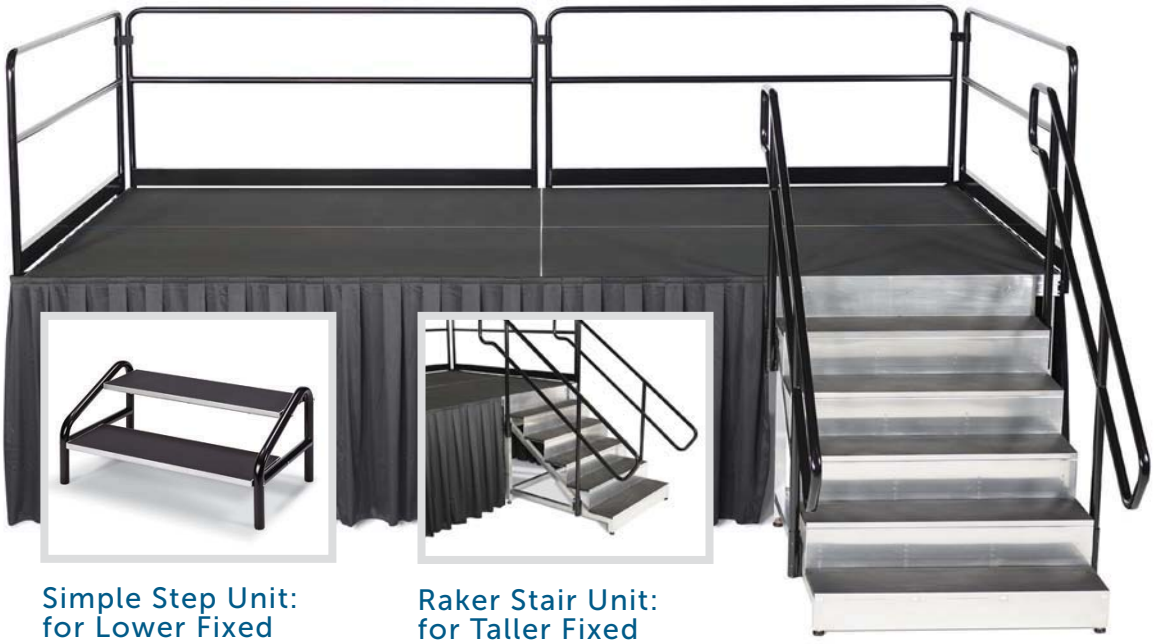

Simple Step Unit: for Lower Fixed Height Stages

Raker Stair Unit: for Taller Fixed

48" Tall Fixed Height Stage with Raker

The Adjustable Height Stair Unit can be easily modified to fit stages that are adjustable in height.

Stage with Adjustable Height Stair Unit

Adjustable Height Stair Unit: Side View

STAGING CONCEPTS
A Trex® Company

We elevate all people's abilities to safely access and enjoy amazing life experiences.

7008 Northland Drive · Suite 150 · Minneapolis, MN 55428 · www.stagingconcepts.com · 763.533.2094

ADVANTAGES

Safety
· Stair units are equipped with two aluminum handrails for the safety of patrons and performers. (Does not apply to Simple Step.)

· Fixed Height Stair Units manufactured with code-compliant rise and run.

Efficiency
· Depending on the style, stair units will lock into platform extrusion with no loose parts or special tools. (Does not apply to Simple Step.)

· Removable aluminum handrails allow for easy transport and storage.

· For use with all of Staging Concepts' platforms.

Variety
· Variety of heights available for both Fixed and Adjustable Height Stair Units.

· Aluminum handrail for all stair units available in mill aluminum, black powder coat, silver powder coat, black anodized, or clear anodized finish.

*Custom sizes and finishes available upon request.

TECHNICAL SPECIFICATIONS

FIXED HEIGHT STAIR UNITS

Simple Step Unit (for lower stages)
The Simple Step Unit features a tread surface that is composed of 1" (25 mm) structural grade plywood available with a variety of surfaces. This stair option is available in standard and custom sizes.

Standard Sizes
· Rise Options: 6" (153 mm), 7" (178 mm) or 8" (203 mm)

· Tread Quantity: 1, 2, or 3

· Width Options: 3' (914 mm) or 4' (1220 mm)

Raker Stair Unit (for taller stages)
The Raker Stair Unit is constructed of structural aluminum tubing and 0.080" (2 mm) formed aluminum risers for superior durability and visual appeal. The tread surface is composed of 1" (25 mm) structural grade plywood available with a variety of surfaces. The Raker Stair Unit is available in standard and custom sizes. Handrails are also available as an accessory.

Standard Sizes
· Rise Options: 6" (153 mm), 7" (178 mm) or 8" (203 mm)

· Tread Quantity: 1+

· Width Options: 3' (914 mm) or 4' (1220 mm)

TECHNICAL SPECIFICATIONS

ADJUSTABLE HEIGHT STAIR UNITS
The Adjustable Stair Unit is constructed of structural aluminum for superior durability and ease of transport. The tread surface is composed of 1" (25 mm) structural grade plywood available with a variety of surfaces. This stair option is available in standard and custom sizes. Handrails are also available as an accessory.

Standard Sizes
· Adjustable Sizes:
4-Tread: 16-24" (406 mm-610 mm)
5-Tread: 24-36" (610 mm-914 mm)
6-Tread: 30-40" (762 mm-1016 mm)
7-Tread: 36-48" (914 mm-1219 mm)
8-Tread: 36-56" (914 mm-1422 mm)
9-Tread: 48-72" (1220 mm-1829 mm)
11-Tread: 48-72" (1220 mm-1829 mm)

· Width Options: 3' (914 mm)

Surface Options
· HDPE: black
· HDPE: gray
· Carpet: black
· Carpet: gray
· Plyron: tempered hardboard
· Aluminum: textured paint

Finish Options
· Mill aluminum
· Black powder coat
· Custom colored powder coat

STAIR UNIT SCHEMATICS

5 Tread Fixed Height Stair Raker

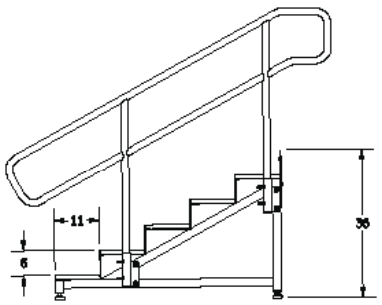

Simple Step Unit

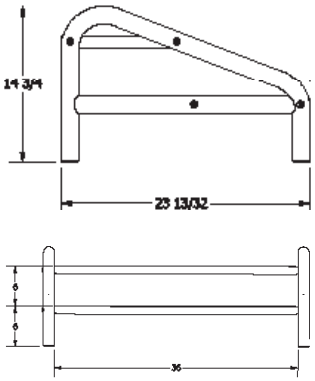

24" - 36" Adjustable Height Stair Unit

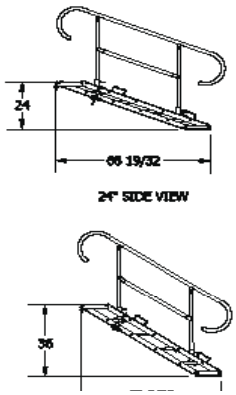

STAGING CONCEPTS
A Trex® Company

We elevate all people's abilities to safely access and enjoy amazing life experiences.

7008 Northland Drive · Suite 150 · Minneapolis, MN 55428 · www.stagingconcepts.com · 763.533.2094

STORAGE AND TRANSPORT CARTS (FOR PLATFORMS)

No need for heavy lifting! Staging Concepts has a variety of platform carts for storage and transport that will fulfill the needs of your facility. The Arena Cart is a high-capacity cart that can carry up to 12 platforms with ratchet straps holding them in place. These carts are designed for use with a forklift with integral forklift guides and standard substantial bracing on the bottom cart surface. Additionally, the push bar is able to be detached for faster and easier platform loading. The Vertical Platform Cart transports up to 10 platforms on edge for easy navigation through doorways and other tight spaces. These carts have removable ends and can also be ordered for a 6 or 8 platform capacity. The Stackable Platform Cart can also hold up to 10 platforms per cart. When stacked, it can accommodate tight but tall storage spaces.

All carts are compatible with all of Staging Concepts' platforms including the SC90® Platform, SC97 Platform, Riser Platform, Trex® Platform, and weather-resistant Clima-Core™ Platform.

Arena Cart

Stackable Platform Cart

Vertical Platform Cart

STAGING CONCEPTS
A Trex® Company

We elevate all people's abilities to safely access and enjoy amazing life experiences.

7008 Northland Drive · Suite 150 · Minneapolis, MN 55428 · www.stagingconcepts.com · 763.533.2094

ADVANTAGES

Efficiency

· Carts serve as both storage and transportation units.

· All carts are equipped with two rigid and two swivel casters for ultimate maneuverability.

· Most models are able to be used with a forklift.

Variety

· Multiple styles available to suit your various application needs.

Durability

· Constructed with heavy gauge structural steel tubing with black powder coat finish.

Capacity

· Arena Cart can hold up to 12 platforms.

· Vertical Platform Cart can hold up to 10 platforms.

· Stackable Platform Cart can hold up to 10 platforms.

TECHNICAL SPECIFICATIONS

The Storage and Transport Carts are compatible with the SC90 Platform, SC97 Platform, Riser Platform, Trex Platform, and Clima-Core Platform.

· Construction: Heavy gauge structural steel tubing to ASTM A501, with black powder coat finish.

· Casters: Two 8" (203 mm) diameter rigid and two 8" (203 mm) diameter swivel casters.

DIMENSIONS, WEIGHTS, AND FINISH OPTIONS

Arena Cart

Fully Loaded Dimensions w/ 4' x 8' (1.22 m x 2.44 mm) platforms	without platforms lbs/kg
100" L x 48" W x 58" H (2540 mm x 1219 mm x 1778 mm)	200/90.7

Capacity: holds up to (12) 4' x 8' (1.22m x 2.44m) platforms

Vertical Platform Cart

Fully Loaded Dimensions w/ 4' x 8' (1.22 m x 2.44 mm) platforms	without platforms lbs/kg
6 Deck Vertical Platform Cart 100" L x 28.5" W x 60" H (2450 mm x 724 mm x 1524 mm)	175/79.4
Capacity: Holds up to (6) 4' x 8' (1.22 m x 2.44 m) Platforms	
8 Deck Vertical Platform Cart 100" L x 38.5" W x 60" H (2450 mm x 997 mm x 1524 mm)	185/83.9
Capacity: Holds up to (8) 4' x 8' (1.22 m x 2.44 m) Platforms	
10 Deck Vertical Platform Cart 100" L x 47" W x 60" H (2450 mm x 1194 mm x 1524 mm)	200/90.7
Capacity: Holds up to (10) 4' x 8' (1.22 m x 2.44 m) Platforms	

*Custom carts are available upon request

Stackable Platform Cart

Fully Loaded Dimensions w/ 4' x 8' (1.22 m x 2.44 mm) platforms	without platforms lbs/kg
Single Cart 101" L x 47" W x 54" H (2565 mm x 1194 mm x 1372 mm	200/90.7
Capacity: Holds up to (10) 4' x 8' (1.22 m x 2.44 m) Platforms	
Stacked Cart: 101" L x 47" W x 108.5" H (2565 mm x 1194 mm x 2756 mm)	400/181.4
Capacity: Holds up to (20) 4' x 8' (1.22 m x 2.44 m) Platforms	

*Custom carts are available upon request

SC90® Trex® PLATFORM

The SC90® Trex® Platform is just like all other Staging Concepts SC90 platforms, except the platform insert is manufactured by our parent company, Trex® Decking. Its strength and durability aligns with the top quality products you've come to learn and trust from Staging Concepts. More specifically, the SC90 Trex Platform features the Enhance® Composite Decking which is made from recycled materials, such as sawdust, plastic packaging, and reclaimed wood. This composite provides the appearance of a clean, wood finish without the maintenance. For instance, this platform is resistant to fade, stain, mold, and mildew, and can easily be cleaned with soap and water. The standard 4' x 8' deck can hold up to 150 lbs. per square foot. Multiple decks can be locked together with the same Roto-Locks used in all other Staging Concepts' SC90 platforms.

ABOUT TREX® ENHANCE

Trex® Enhance is a low-maintenance, high-performance composite that offers all the charm and none of the trouble of real wood. With its high-definition grain pattern and classic color options, Enhance features a rich, sophisticated finish at a value that only adds to its appeal.

AVAILABLE COLORS (More colors available upon request.)

BEACH DUNE

CLAM SHELL

SADDLE

STAGING CONCEPTS
A Trex® Company

We elevate all people's abilities to safely access and enjoy amazing life experiences.

7008 Northland Drive · Suite 150 · Minneapolis, MN 55428 · www.stagingconcepts.com · 763.533.2094

ADVANTAGES

Strength

· Constructed of recycled wood, plastic, and sawdust.

· Engineered to support 150 lbs/sq ft.

· Top locking Roto-Locks provide monolithic floor when platforms are locked together.

Durability & Efficiency

· Low maintenance, high performance deck is resistant to fade, stain, mold, and mildew.

· Compatible with all Trex Railing.

Convenience

· Easily clean with soap and water or a pressure water.

· Spft, splinter-free finish.

· Features Trex Hideaway® Hidden Fasteners so there are no visible screws on top.

Variety

· Multiple surface options available: Beach Dune, Clam Shell, and Saddle. (More colors available upon request.)

· Decking can run either the long way or the short way of the platform.

TECHNICAL SPECIFICATIONS

The SC90 Trex Platform is a single-sided, outdoor, weather-resistant, portable platform.

Platform is designed to be fully field repairable, to function with all of Staging Concepts' supports, and to comply with the following:

· Edging: 4" (101.6 mm) high, extruded 6005A-T61 aluminum frame, including protective edge, mill finish. Design fame to accept:

- Built-in Roto-Lock system
- Structural locking clip system
- Guardrails
- Chair stops
- Closure panels
- Step units
- Skirting clips

· Platform extrusion accessory groves are compatible with leading manufacturer's channel nuts for alternate attachment methods.

DIMENSIONS, WEIGHTS, AND FINISH OPTIONS

4' x 8' (1.22 m x 2.44 m)	(lbs/kg)
3 Beams (Long Way)	259/117.5
5 Beams (Short Way)	237/107.5

4' x 6' (1.22 m x 1.83 m)	(lbs/kg)
3 Beams (Long Way)	205/92.9
4 Beams (Short Way)	190/86.2

4' x 4' (1.22 m x 1.22 m)	(lbs/kg)
2 Beams	130/58.9

3' x 8' (0.92 m x 2.44 m)	(lbs/kg)
2 Beams (Long Way)	189/85.7
5 Beams (Short Way)	194/87.9

3' x 6' (0.92 m x 1.83 m)	(lbs/kg)
2 Beams (Long Way)	142/64.4
4 Beams (Short Way)	157/71.2

3' x 4' (0.92 m x 1.22 m)	(lbs/kg)
2 Beams	98/44.5

3' x 3' (0.92 m x 0.92 m)	(lbs/kg)
1 Beam	72.3/32.8

Aluminum Frame Options:

Mill finish; Powder coat finish (black or silver); Anodized finish (black or clear)

SC90 TREX PLATFORM SCHEMATICS

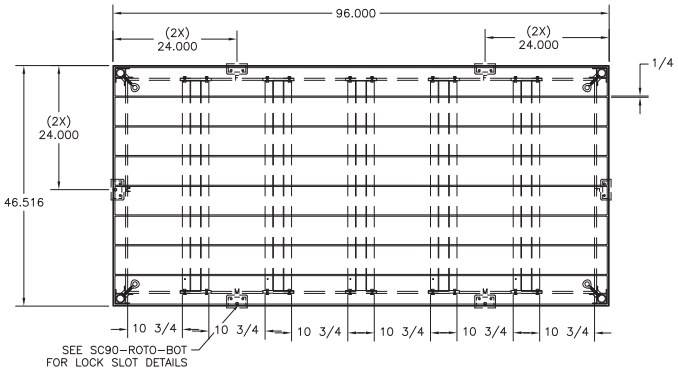

Panels - Length of the Deck

Panels - Width of the Deck

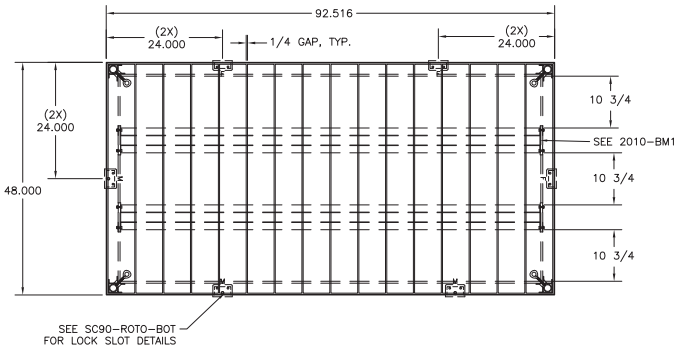

UPLIFT® PLATFORM

Let your stage do the work with Staging Concepts' UPLIFT®! The design of the Uplift allows you to move your platforms up and down with no manual labor or lifting. This revolutionary platform is a scissor stage that is raised and lowered with an electric drill, allowing you and your team to setup your venue quickly, efficiently, and with the least amount of effort. Most importantly, the Uplift can be designed to stop at any number of points. The Uplift can be built into custom shapes and sizes to meet the needs of your venue, eliminating any storage requirements or hours of assembly time for setup and take down. This product is compatible with all Staging Concepts' standard accessories, such as skirting, closure panels, and guardrails. Made in the USA, lead times for the Uplift are short and installation is easy because the Uplift is fully supported by Staging Concepts' technicians and engineering staff. (The Uplift is a patented product.)

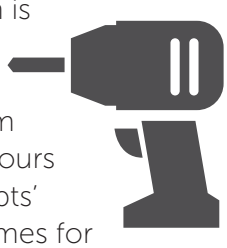

Standard Sizes:

3' x 8' (0.92 m x 2.44 m) 4' x 8' (1.22 m x 2.44 m) Custom sizes and shapes available

Loading: 150 PSF

Standard Features:

- No lifting requirements - drill operated!
- Permanent anchoring
- Smooth transition in around one minute
- Compatible with all Staging Concepts' accessories (guardrails, skirting, etc.)

Applications:

- Seating Risers
- Pit Fillers
- Performance Spaces

ADVANTAGES

Strength

· No lifting needed - the Uplift is drill powered. Simply insert a recommeded cordless drill, with the provided adapter, into the gear box input shaft, and allow the drill to raise and lower the platform.

· Aluminum frame construction is designed for maximum strength and long-term durability.

· Anchored to floors with simple mechanical expansion anchors.

· Engineered to support 150 lbs/square foot (732.4 kg/sq meter) with additional loading options.

· The Uplift is designed to stop at any level, allowing for the utmost customization.

Durability & Efficiency

· Simple and consistently easy to operate. Raise and lower platform using a recommended drill. (See Operations Notes for options.)

· Simple maintenance can be done by greasing the drive screw and ensuring the gear box is full of oil. A maintenance and inspection schedule will be provided.

· Delrin® wheels allow for smooth operation and are built to last.

· Able to lock to adjacent Uplifts to provide a flat, uniform surface or standalone as an independent system.

Variety

· Multiple surface options available: HDPE (black or gray), commercial grade carpet (black or gray). unfinished plywood, painted plywood (black), Plyron (tempered hardboard), or customer-specific tongue and groove.

· Proprietary perimeter extrusion is compatible with all of Staging Concepts' current accessories (guardrails, closure panels, skirting, etc.)

· Available in custom shapes and sizes. Please inquire for custom applications.

Aluminum Frame Options

Mill finish, anodized finish (black or clear), or powder coat.

Operation Notes

Drill not included with purchase. Staging Concepts recommends purchasing one of the following drill options for smooth operation of this product:

· Hilti SFC 22-A Electric Drill
· DeWalt 20V Max XR Lithium Ion Brushless Premium 3-Speed Drill/Driver Kit

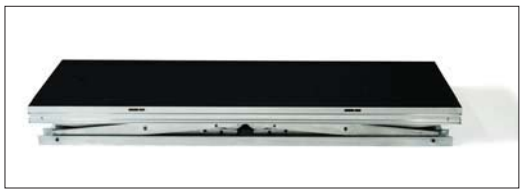

UPLIFT STAGE SCHEMATICS

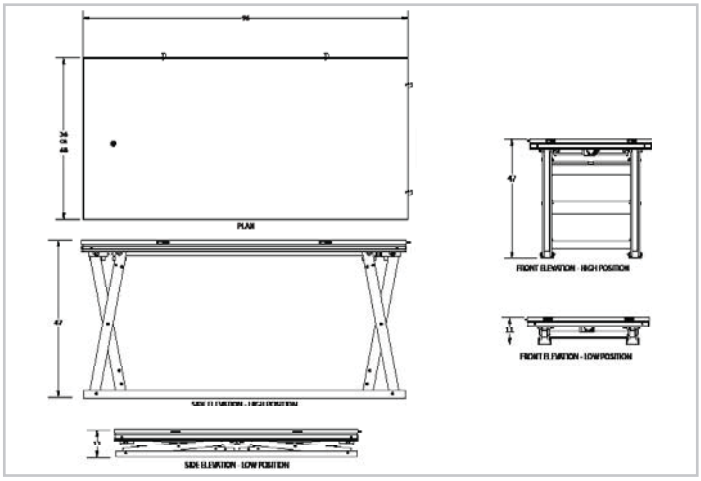

DIMENSIONS, WEIGHTS, AND FINISH OPTIONS

STANDARD SIZES

4' x 8' (1.22 m x 2.44 m)
150 PSF

3' x 8' (0.92 m x 2.44 m)
150 PSF

Maximum height with an 8' long platform: **47"** (without shims)

Minimum height with an 8' long platform: **11"** (without shims)

Custom sizes available upon request. Leveling can be accomplished using shims in 1/16", 1/8", and 1/4" thickness. Platform lengths varying from the standard 8' will change the height ability.

VIP DRINK RAIL ATTACHMENT

Staging Concepts' VIP Drink Rail is an add-on component to the Staging Concepts guardrail line. The VIP Drink Rail Attachment fits on all styles of Staging Concepts' guardrails, and is designed for use as a ledge for concession stand items, workspace or writing surface. This attachment is available in a variety of finishes, including clear anodized, silver powder coat, and black powder coat. It is constructed of 1/8" aluminum formed sheet, producing a lightweight, durable product.

Create an enhanced VIP experience with the VIP Drink Rail! Staging Concepts' popular VIP Rail Attachment is available for use with all guardrails. The VIP Rail Attachment can be used as:

- A drink rail to set beverages or food
- A workspace for laptops, tablets or other media
- A writing surface for notepads

And much more!

(left) The VIP Drink Rail Attachment is compatible with Staging Concepts' Invisirail, Tensiline, IBC, 2-line, and Gridguard guardrails.

ADVANTAGES

Efficiency

· Sets up in minutes.

· No tools are needed to attach drink rail to existing guardrail. Simply place drink rail over guardrail, ensuring the bottom of the drink rail sits flush on the top of the guardrail, and then tighten the eyebolt.

TECHNICAL SPECIFICATIONS

Staging Concepts' VIP Drink Rail Attachment is designed to comply with our guardrails: 2-Line, Tensiline, Invisirail, Gridguard, and IBC.

· Tray depth: 7"

· Material: 1/8" 5052-T52 Aluminum

DIMENSIONS, WEIGHTS, AND FINISH OPTIONS

Dimensions:	Weight:
8' length	20 lbs
4' Length	11 lbs

*Custom sizes and surfaces are available upon request

Finish:

Finish: Mill finish aluminum, powder coat finish (black or silver – other colors available upon request), clear anodized

STAGING CONCEPTS
A Trex® Company

We elevate all people's abilities to safely access and enjoy amazing life experiences.

7008 Northland Drive · Suite 150 · Minneapolis, MN 55428 · www.stagingconcepts.com · 763.533.2094